NW 1/4 OF SECTION 21, TOWNSHIP 17 NORTH, RANGE 02 EAST

PROPOSED C-MART/RETAIL SHOPS

8562 LAFAYETTE ROAD
INDIANAPOLIS, INDIANA

FINAL CONSTRUCTION PLANS

DEVELOPER:
THREE MILE PROPERTIES, INC.
5820 West 56th Street, Suite #1
Indianapolis, IN 46254
Ph: 317-248-4802
Fax: 317-800-7947

ARCHITECT:
VISION II DESIGN STUDIO, INC.
1364 Colony Park Circle
Greenwood, IN 46143
Ph: 317-281-7982
Fax:

ENGINEER:
ROGER WARD ENGINEERING, INC.
7474 Noel Road
Indianapolis, Indiana 46278
Ph: 317-251-1738
Fax: 317-251-1923

VICINITY MAP
SCALE : NONE

BENCHMARK NOTE
PIKE 91A

General coordinates: 8562N & 8500N
Sec. 21-17-2: Run in from P 91 MCS, in the NE corner of the porch at 8562 N. Lafayette Road, 0.5' W of the NE corner of the porch, 200' W of the centerline of US 52 and 135' S of W. 86th Street.

ELEV. 898.36

D.O.T. QUALITY CONTROL INSPECTION SERVICES
2001 DR. MARTIN LUTHER KING JR. STREET
INDIANAPOLIS, INDIANA
(317) 924-4106

DEPARTMENT OF CODE ENFORCEMENT
1200 MADISON AVENUE, SUITE 100
INDIANAPOLIS, INDIANA 46225
(317) 327-8700

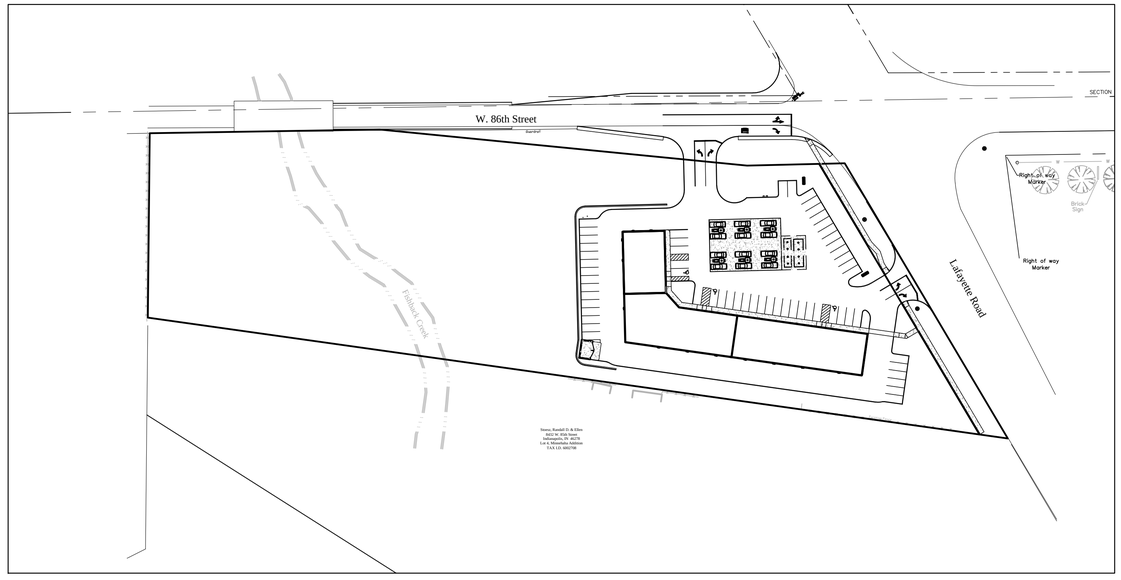

SITE MAP
SCALE : 1" = 80'

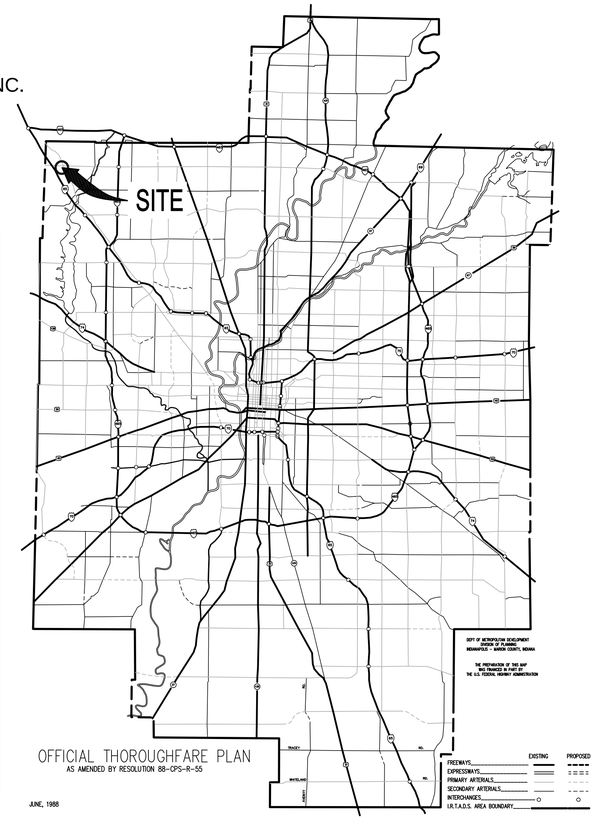

OFFICIAL THOROUGHFARE PLAN
AS AMENDED BY RESOLUTION 88-OPS-R-55
JUNE, 1988

UTILITIES - INDIANAPOLIS

GAS	ELECTRIC
Citizens Energy 2020 North Meridian Street Indianapolis, IN 46202 (317) 924-3311 (Customer Service)	IPL 1230 West Morris Street Indianapolis, IN 46221 (317) 261-5274
TELEPHONE	CABLE TV
AT&T 5858 North College Avenue Indianapolis, IN 46220 (317) 252-5193	Comcast Cablevision 5330 East 65th Street Indianapolis, IN 46220 (317) 872-2223
STORM SEWER	STREETS
DPW/DMD 1200 Madison Avenue Indianapolis, IN 46225 (317) 327-8700	DPW/DMD 1200 Madison Avenue Indianapolis, IN 46225 (317) 327-8700
WATER	SANITARY SEWER
Citizens Energy 2020 North Meridian Street Indianapolis, IN 46202 (317) 924-3341 (Water Customer Service)	Citizens Energy 2020 North Meridian Street Indianapolis, IN 46202 (317) 924-3311 (Customer Service)

Utility Hotline: within Indiana 1-800-382-5544
outside Indiana 1-800-428-5200

NOTE
The size and location of utilities are per plans and locations provided by the respective utility companies. All utility companies shall be notified prior to any excavation for field location of services.

REVISIONS

DATE:	DESCRIPTION
.	..

INDEX

SHEET No.	DESCRIPTION
C100	COVER SHEET
C1	EXISTING CONDITIONS PLAN
C101	SITE PLAN
C102	UTILITY PLAN
C103	GRADING & DRAINAGE PLAN
C104	EROSION CONTROL PLAN
C105	EROSION CONTROL DETAILS
C106	EROSION CONTROL SPECIFICATIONS
C401	SANITARY SEWER PLAN & PROFILE
C801	GENERAL DETAILS
C802	GENERAL DETAILS
C901	SPECIFICATIONS
L101	LANDSCAPE PLAN

INDIANA DEPARTMENT OF TRANSPORTATION
SPECIFICATIONS DATED 2008 TO BE USED WITH THESE PLANS

APPLICABLE DPW STANDARDS

SHEET No.	DESCRIPTION
10-03	TYPICAL SECTION - NON RESIDENTIAL STREET
11-01	PAVEMENT JOINTS
11-02	JOINT DETAILS
12-02	MONOLITHIC CONCRETE CURB
12-03	GENERAL NOTES FOR CURB & GUTTER
12-04	CURB JOINT DETAIL
14-01	SIDEWALK DETAILS
14-02	SIDEWALK RAMP FOR HANDICAPPED
15-01	PAVEMENT TYPE AND THICKNESSES
30-30	PIPE UNDERDRAIN
92-01	STANDARD BACKFILL DETAILS
93-01	REPAIR OF CUTS WITHIN PAVEMENT LIMITS

STORM WATER STRUCTURE SUMMARY TABLE

ITEM	TYPE	COUNT (UNITS)
18 INCH PIPE	RCP	36 (FT)
15 INCH PIPE	RCP	510 (FT)
12 INCH PIPE	RCP	365 (FT)
10 INCH PIPE	HDPE	36 (FT)
CATCHBASINS	N/A	10 (EA)
MANHOLES	N/A	2 (EA)
END SECTIONS	CONC.	4 (EA)

WATER QUALITY SUMMARY TABLE

WATER QUALITY UNIT DESCRIPTION	NORTHING	EASTING
AQUASWRL AS5	1698361.65	146866.55

PENDING AGENCY APPROVAL

CERTIFIED BY: ROGER C. WARD, J.R., P.E.

THESE DOCUMENTS ARE SUBJECT TO PERIODIC REVISIONS BY ROGER WARD ENGINEERING. THE HOLDER IS RESPONSIBLE FOR VERIFYING THAT THESE DOCUMENTS ARE THE MOST CURRENT PRIOR TO USE.

THIS DRAWING AND THE IDEAS, DESIGNS AND CONCEPTS CONTAINED HEREIN ARE THE EXCLUSIVE INTELLECTUAL PROPERTY OF ROGER WARD ENGINEERING AND ARE NOT TO BE USED OR REPRODUCED IN WHOLE OR IN PART, WITHOUT THE WRITTEN CONSENT OF ROGER WARD ENGINEERING.
2012, ROGER WARD ENGINEERING, INC.

ROGER WARD ENGINEERING INCORPORATED
CIVIL ENGINEERS - LAND PLANNERS - DEVELOPMENT CONSULTANTS
7474 NOEL ROAD
INDIANAPOLIS, INDIANA 46278
(317) 251-1738 (FAX) 251-1923
www.rw-engineering.com

COVER SHEET

DRAWN BY: DBS
DATE: 01/26/2015
FILE NAME: TMP/001/DWG/C100
ADD:

REVISIONS:
1.- 03/19/15 DBS REVISED PER DLZ COMMENTS
2.- 04/03/15 DBS REVISED PER DLZ COMMENTS
4.-

THREE MILE PROPETIES, INC.
PROPOSED C-STORE
& RETAIL SHOPS
8562 LAFAYETTE ROAD
INDIANAPOLIS, INDIANA

ROGER C. WARD, JR. REGISTERED
No. PE19800489
STATE OF INDIANA
PROFESSIONAL ENGINEER

BY:

DATE: mm-dd-2015

SHEET
C100
OF
X

JOB#: TMP.001

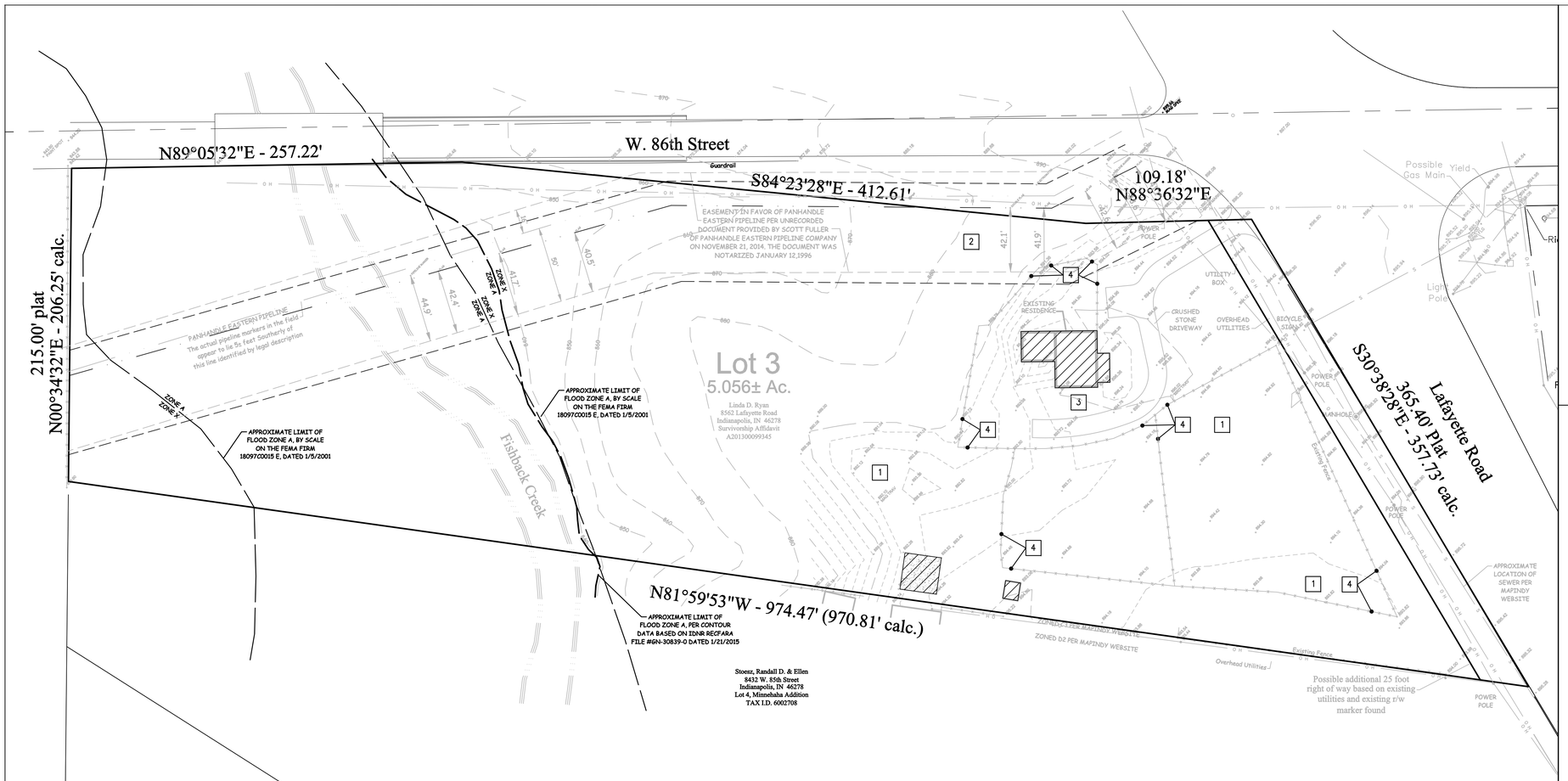

ASSUMED NORTH
SCALE: 1"= 20 '

20 0 20 40 80

Indiana 811
Know what's below.
Call before you dig.

LEGEND

- EXISTING SANITARY SEWER & MANHOLE
- EXISTING STORM SEWER; INLET & M.H.
- EXISTING GAS LINE
- EXISTING WATER LINE
- EXISTING UNDERGROUND ELECTRIC LINE
- EXISTING UNDERGROUND TELEPHONE LINE
- EXISTING CABLE TELEVISION LINE
- EXISTING FIRE HYDRANT
- EXISTING VALVE; GAS & WATER
- EXISTING ELECTRIC MANHOLE & TRANSFORMER
- EXISTING TELEPHONE MANHOLE & PEDESTAL
- EXISTING WATER METER
- EXISTING BOLLARDS
- EXISTNG AREA LIGHT
- DENOTES CURB REMOVAL
- HATCHING DENOTES BUILDING AND FULL DEPTH PAVEMENT REMOVAL

GENERAL NOTES

1. OWNER ASSUMES NO RESPONSIBILITY FOR ACTUAL CONDITION OF ITEMS OR STRUCTURES TO BE DEMOLISHED.

2. PROVIDE TEMPORARY BARRICADES AND OTHER FORMS OF PROTECTION AS NEEDED TO PROTECT OWNER'S PERSONNEL AND THE GENERAL PUBLIC FROM INJURY DUE TO THE DEMOLITION AREA.

3. REPAIR ALL INCIDENTAL DAMAGE TO ADJACENT FACILITIES CAUSED BY GENERAL DEMOLITION AT NO ADDITIONAL COST TO OWNER.

4. CONDUCT SELECTIVE DEMOLITION OPERATIONS AND DEBRIS REMOVAL IN A MANNER TO ENSURE MINIMUM INTERFERENCE WITH ROADS, STREETS, WALKS, AND OTHER ADJACENT OCCUPIED OR USED FACILITIES.

5. DO NOT CLOSE, BLOCK OR OTHERWISE OBSTRUCT STREETS, WALKS, OR OTHER OCCUPIED OR USED FACILITIES WITHOUT WRITTEN PERMISSION AND/OR REQUIRED PERMITS FROM LOCAL JURISDICTION. PROVIDE ALTERNATE ROUTES AROUND CLOSED OR OBSTRUCTED TRAFFIC WAYS IF REQUIRED BY GOVERNING JURISDICTION.

6. DO NOT INTERRUPT EXISTING UTILITIES SERVING OCCUPIED OR USED FACILITIES, EXCEPT WHEN AUTHORIZED IN WRITING FROM UTILITY COMPANY.

7. USE WATER SPRINKLING, TEMPORARY ENCLOSURES, AND OTHER SUITABLE METHODS TO LIMIT DUST, DIRT, AND DEBRIS TO LOWEST PRACTICAL LEVELS. COMPLY WITH GOVERNING REGULATIONS PERTAINING TO ENVIRONMENTAL PROTECTION.

8. PERFORM SELECTIVE DEMOLITION WORK IN A SYSTEMATIC MANNER. USE SUCH METHODS AS NECESSARY TO COMPLETE DEMOLITION SHOWN ON DRAWINGS.

9. COMPLETELY FILL BELOW-GRADE AREAS AND VOIDS RESULTING FROM DEMOLITION WORK. PROVIDE FILL CONSISTING OF APPROVED EARTH, GRAVEL OR SAND, FREE OF TRASH AND DEBRIS, STONES OVER 6" DIAMETER, ROOTS, TOPSOIL, AND OTHER ORGANIC MATTER.

10. REMOVE DEBRIS, RUBBISH AND OTHER MATERIALS RESULTING FROM DEMOLITION OPERATIONS FROM SITE. TRANSPORT AND LEGALLY DISPOSE OF MATERIALS FROM SITE.

11. IF HAZARDOUS MATERIALS ARE ENCOUNTERED DURING DEMOLITION OPERATIONS, COMPLY WITH ALL APPLICABLE REGULATIONS, LAWS, AND ORDINANCES CONCERNING REMOVAL, HANDLING AND PROTECTION AGAINST EXPOSURE OR ENVIRONMENTAL POLLUTION.

12. UPON COMPLETION OF DEMOLITION WORK, REMOVE TOOLS, EQUIPMENT, AND DEMOLISHED MATERIALS FROM SITE. REMOVE PROTECTION BARRICADES AND LEAVE SITE FREE OF DEBRIS.

13. REPAIR DEMOLITION PERFORMED IN EXCESS OF THAT REQUIRED. RETURN FACILITIES AND SURFACES TO REMAIN TO THEIR EXISTING CONDITION PRIOR TO COMMENCEMENT OF SELECTIVE DEMOLITION WORK. REPAIR ADJACENT CONSTRUCTION OR SURFACES SOILED OR DAMAGED.

14. TEMPORARY TRAFFIC CONTROL DURING CONSTRUCTION TO CONFORM TO APPLICABLE LOCAL AND STATE STANDARDS.

15. ALL CONSTRUCTION ACTIVITY ON THIS SITE TO BE PERFORMED IN COMPLIANCE WITH APPLICABLE O.SH.A. STANDARDS FOR WORKER SAFETY.

16. IT SHALL BE THE CONTRACTORS RESPONSIBILITY TO FIELD VERIFY ALL UTILITY LOCATIONS BEFORE CONSTRUCTION BEGINS.

17. ALL PROPOSED SIDEWALKS SHALL ALIGN WITH EXISTING SIDEWALKS AT THEIR POINT OF CONNECTION.

18. SIGN SPECIFICATIONS SHALL COMPLY WITH THE "INDIANA DEPARTMENT OF TRANSPORTATION MANUAL ON UNIFORM TRAFFIC CONTROL DEVICES FOR STREETS AND HIGHWAYS", LATEST EDITION, UNLESS OTHERWISE APPROVED BY THE CITY OF INDIANAPOLIS DPW.

KEY NOTES

1. CONTRACTOR TO REMOVE EXISTING LANDSCAPING WITHIN PROJECT LIMITS.
2. CONTRACTOR TO MINIMIZE REMOVAL OF LANDSCAPING WITHIN PIPELINE EASEMENT.
3. CONTRACTOR TO REMOVE EXISTING UNDERGROUND UTILITIES TO THE EXISTING BUILDINGS.
4. CONTRACTOR TO REMOVE EXISTING PERIMETER FENCE.
5. CONTRACTOR TO REMOVE EXISTING LANDSCAPE TIMBERS.
6. CONTRACTOR TO REMOVE EXISTING RETAINING WALL.

OFF-SITE UTILITY NOTE

EXISTING UTILITIES OUTSIDE OF THE SITE LIMITS WERE NOT LOCATED AS PART OF THE SITE UTILITY LOCATES. THE CONTRACTOR SHALL VERIFY THE LOCATION OF ALL EXISTING UTILITIES OUTSIDE OF THE SITE LIMITS PRIOR TO ANY WORK.

UTILITY NOTE

THE LOCATIONS OF ALL EXISTING UNDERGROUND UTILITIES SHOWN ON THIS PLAN ARE BASED UPON MARKINGS PROVIDED BY IUPPS PRIOR TO THE SURVEY FIELD WORK BEING PERFORMED AND UPON ABOVE GROUND EVIDENCE (INCLUDING, BUT NOT LIMITED TO, MANHOLES, INLETS, VALVES, AND MARKS MADE UPON THE GROUND BY OTHERS) AND ARE SPECULATIVE IN NATURE. THERE MAY ALSO BE OTHER UNDERGROUND UTILITIES FOR WHICH THERE IS NO ABOVE GROUND EVIDENCE OR FOR WHICH NO ABOVE GROUND EVIDENCE WAS OBSERVED. THE EXACT LOCATION OF EXISTING UNDERGROUND UTILITIES SHALL BE VERIFIED BY THE CONTRACTOR PRIOR TO ANY AND ALL CONSTRUCTION.

ROGER WARD ENGINEERING INCORPORATED
CIVIL ENGINEERS - LAND PLANNERS - DEVELOPMENT CONSULTANTS
7474 NOEL ROAD
INDIANAPOLIS, INDIANA 46278
(317) 251-1738 (FAX) 251-1923
www.rw-engineering.com

EXISTING CONDITIONS

REVISIONS:
1.- 03/19/15 DBS REVISED PER DLZ COMMENTS
2.- 04/03/15 DBS REVISED PER DLZ COMMENTS
4.-

DRAWN BY: DBS
DATE: 01/26/2015
FILE NAME: TMP/001/DWK/C100
XREF:

THREE MILE PROPETIES, INC.
PROPOSED C-STORE
& RETAIL SHOPS
8562 LAFAYETTE ROAD
INDIANAPOLIS, INDIANA

ROGER C. WARD JR
REGISTERED
No.
PE19800489
STATE OF
INDIANA
PROFESSIONAL ENGINEER

BY:

DATE: mm-dd-2015

SHEET
C1
OF
X

JOB#: TMP.001

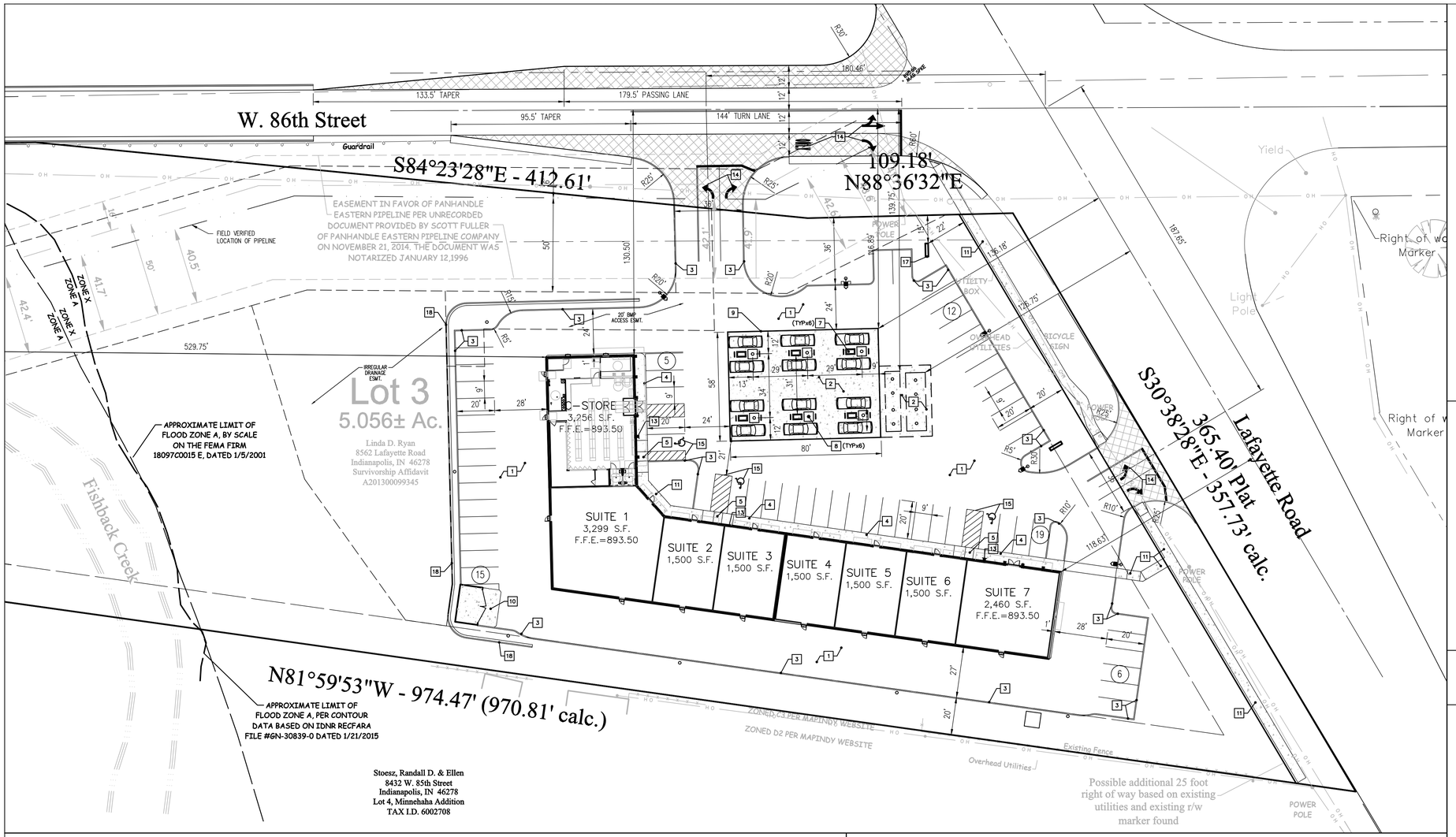

ASSUMED NORTH
SCALE: 1"= 30 '

30 0 30 60 90

Indiana 811
Know what's below.
Call before you dig.

DEVELOPMENT SUMMARY

SITE INFORMATION :
TOTAL SITE AREA = +/- 5.06 AC
SITE ZONING = C3
FRONT BUILDING AND PAVEMENT SETBACK = 10' FROM R/W OR 70' FROM CL
FRONT TRANSITIONAL YARD = 20'
SIDE TRANSITIONAL YARD = 20'
REAR TRANSITIONAL YARD = 10'

REQUIRED PARKING CALCULATION :
CONVENIENCE STORE - 1 SPACE PER 285 S.F.
(3,256 S.F.) = 12 SPACES
RETAIL: 4.0 SPACES PER 1,000 S.F.
(13,259 S.F.) = 53 SPACES

-TOTAL PARKING SPACES REQUIRED = 65 SPACES

PROPOSED PARKING CALCULATION :
PARKING SPACES PROVIDED = 54 SPACES
PARKING SPACES PROVIDED AT FUEL ISLANDS = 12 SPACES
ACCESSIBLE SPACES PROVIDED = 3 SPACES

-TOTAL PARKING SPACE PROVIDED = 69 SPACES

BOUNDARY DESCRIPTION

Lot 3 in Minnehaha Addition in Marion County, Indiana, the plat of which is recorded in Plat Book 24, Page 441, in the Office of the Recorder of Marion County, Indiana.

LEGEND

- EXISTING SANITARY SEWER & MANHOLE
- EXISTING STORM SEWER; INLET & M.H.
- G — EXISTING GAS LINE
- WTR — EXISTING WATER LINE
- OVHD — EXISTING ELECTRIC/TELEPHONE LINE (AERIAL)
- UGE — EXISTING UNDERGROUND ELECTRIC LINE
- UGT — EXISTING UNDERGROUND TELEPHONE LINE
- EXISTING FIRE HYDRANT
- EXISTING VALVE; GAS & WATER
- E — EXISTING ELECTRIC MANHOLE & TRANSFORMER
- T — EXISTING TELEPHONE MANHOLE & PEDESTAL
- WM — EXISTING WATER METER
- EXISTING AREA LIGHT
- (14) — NUMBER OF PROPOSED PARKING SPACES
- HATCHING DENOTES CONCRETE WALKS AND PAVEMENT
- HATCHING DENOTES ASPHALT PAVEMENT WITHIN THE PUBLIC RIGHT-OF-WAY

UTILITY NOTE

THE LOCATIONS OF ALL EXISTING UNDERGROUND UTILITIES SHOWN ON THIS PLAN ARE BASED UPON MARKINGS PROVIDED BY IUPPS PRIOR TO THE SURVEY FIELD WORK BEING PERFORMED AND UPON ABOVE GROUND EVIDENCE (INCLUDING, BUT NOT LIMITED TO, MANHOLES, INLETS, VALVES, AND MARKS MADE UPON THE GROUND BY OTHERS) AND ARE SPECULATIVE IN NATURE. THERE MAY ALSO BE OTHER UNDERGROUND UTILITIES FOR WHICH THERE IS NO ABOVE GROUND EVIDENCE OR FOR WHICH NO ABOVE GROUND EVIDENCE WAS OBSERVED. THE EXACT LOCATION OF EXISTING UNDERGROUND UTILITIES SHALL BE VERIFIED BY THE CONTRACTOR PRIOR TO ANY AND ALL CONSTRUCTION.

GENERAL NOTES

1. IT SHALL BE THE RESPONSIBILITY OF EACH SUBCONTRACTOR TO VERIFY ALL EXISTING UTILITIES AND CONDITIONS PERTAINING TO THEIR PHASE OF WORK. IT SHALL ALSO BE THE SUBCONTRACTOR'S RESPONSIBILITY TO CONTACT THE OWNERS OF THE VARIOUS UTILITIES FOR PROPER STAKE LOCATION OF EACH UTILITY BEFORE WORK IS STARTED. THE SUBCONTRACTOR SHALL NOTIFY IN WRITING THE OWNER AND THE ENGINEER OF ANY CHANGES, OMISSIONS, OR ERRORS FOUND ON THESE PLANS OR IN THE FIELD BEFORE WORK IS STARTED OR RESUMED.

2. STANDARD SPECIFICATIONS FOR THE LOCAL GOVERNING AGENCY SHALL APPLY FOR ALL SANITARY SEWERS, STORM SEWERS, AND WATER MAINS.

3. ALL PARKING STRIPES ARE TO BE 4" PAINTED (WHITE), HANDICAPPED ACCESS AISLES SHALL BE 4" PAINTED (BLUE).

4. ALL DIMENSIONS ARE TO EDGE OF PAVEMENT OR FACE OF CURB, UNLESS NOTED OTHERWISE.

5. THE EDGE OF EXISTING ASPHALT PAVEMENT SHALL BE PROPERLY SEALED WITH A TACK COAT MATERIAL IN ALL AREAS WHERE NEW ASPHALT PAVEMENT IS INDICATED TO JOIN EXISTING ASPHALT.

6. ANY PART OF THE SANITARY OR STORM SEWER TRENCHES RUNNING UNDER OR WITHIN 5' OF PAVED AREAS TO BE BACKFILLED WITH GRANULAR MATERIAL.

7. ALL WATER MAINS TO HAVE A 54" MINIMUM COVER OVER TOP OF PIPE.

8. WATER SERVICE LINE TO THE BUILDING SHALL HAVE A SHUT-OFF VALVE IN AN ACCESSIBLE LOCATION OUTSIDE OF THE BUILDING.

9. STERILIZATION OF WATER MAIN SHALL BE IN ACCORDANCE WITH STATE BOARD OF HEALTH REQUIREMENTS.

10. EXPANSION JOINTS ARE TO BE PLACED AT ALL WALK INTERSECTIONS AND BETWEEN WALKS AND PLATFORMS. SIDEWALK SCORES ARE TO BE EQUALLY PLACED BETWEEN EXPANSION JOINTS, CONTRACTION JOINTS, AND PERPENDICULAR SIDEWALKS AT 5' INTERVALS OR LESS WITH A CONTRACTION JOINT EVERY 20' OR LESS.

11. REFER TO ARCHITECTURAL PLANS FOR BUILDING DIMENSIONS.

12. ALL 6" PVC SANITARY SEWER LATERALS SHALL BE INSTALLED AT A MINIMUM SLOPE OF 1.04%.

13. ALL LATERALS ARE REQUIRED TO HAVE TRACER WIRE INSTALLED ON THE TOP OF THE PIPE FROM THE SEWER MAIN TO THE CLEANOUT.

14. CONTRACTOR TO REFER TO SITE LIGHTING PLAN FOR LOCATION OF LIGHT POLES.

15. CONTRACTOR TO PROVIDE SUFFICIENT CONDUIT WHERE ELECTRIC LINES CROSS PAVEMENT.

KEY NOTES

1. PROPOSED ASPHALT PAVEMENT (SEE SHEET C801).
2. PROPOSED CONCRETE PAVEMENT (SEE SHEET C801).
3. PROPOSED CONCRETE STRAIGHT CURB (SEE SHEET C801).
4. PROPOSED INTEGRAL CURB & WALK (SEE SHEET C801).
5. PROPOSED ADA RAMP (SEE THIS SHEET).
6. PROPOSED CONCRETE BOLLARD (QTY: 5) (SEE SHEET C801).
7. PROPOSED FUEL ISLAND (TYPICAL X 4).
8. 5' X 5' FOOTER & COLUMN FOR PROPOSED FUEL CANOPY (TYPICAL X 4).
9. PROPOSED FUEL CANOPY.
10. PROPOSED 12' x 12' - 6' TALL WOOD TRASH ENCLOSURE
11. PROPOSED SIDEWALK (SEE SHEET C801).
12. PROPOSED LIGHT POLE.
13. "RESERVED PARKING" (R7-8) SIGN MOUNTED TO WALL MIN. 60" ABOVE GRADE (SEE SHEET C801).
14. PROPOSED PAVEMENT MARKINGS PER DPW STANDARDS.
15. PROPOSED ADA PAVEMENT MARKINGS (PAINTED BLUE) (SEE SHEET C801).
16. PROPOSED BICYCLE RACKS.
17. PROPOSED MONUMENT SIGN
18. PROPOSED RETAINING WALL (SEE STRUCTURAL/GEOTECH PLANS)

ROGER WARD ENGINEERING INCORPORATED
CIVIL ENGINEERS - LAND PLANNERS - DEVELOPMENT CONSULTANTS
7474 NOEL ROAD
INDIANAPOLIS, INDIANA 46278
(317) 251-1738 (FAX) 251-1923
www.rw-engineering.com

SITE PLAN

REVISIONS:
1.- 02/19/15 DBS REVISED PER DLZ COMMENTS
2.- 04/02/15 DBS REVISED PER DLZ COMMENTS
3.-
4.-

DRAWN BY: DBS
DATE: 01/26/2015
FILE NAME: W5/001/DWG/C100
ADD:

THREE MILE PROPETIES, INC.
PROPOSED C-STORE
& RETAIL SHOPS
8562 LAFAYETTE ROAD
INDIANAPOLIS, INDIANA

ROGER C. WARD, JR.
REGISTERED
No.
PE19800489
STATE OF
INDIANA
PROFESSIONAL ENGINEER

BY:

DATE: mm-dd-2015

SHEET
C101
OF
X

JOB#: TMP.001

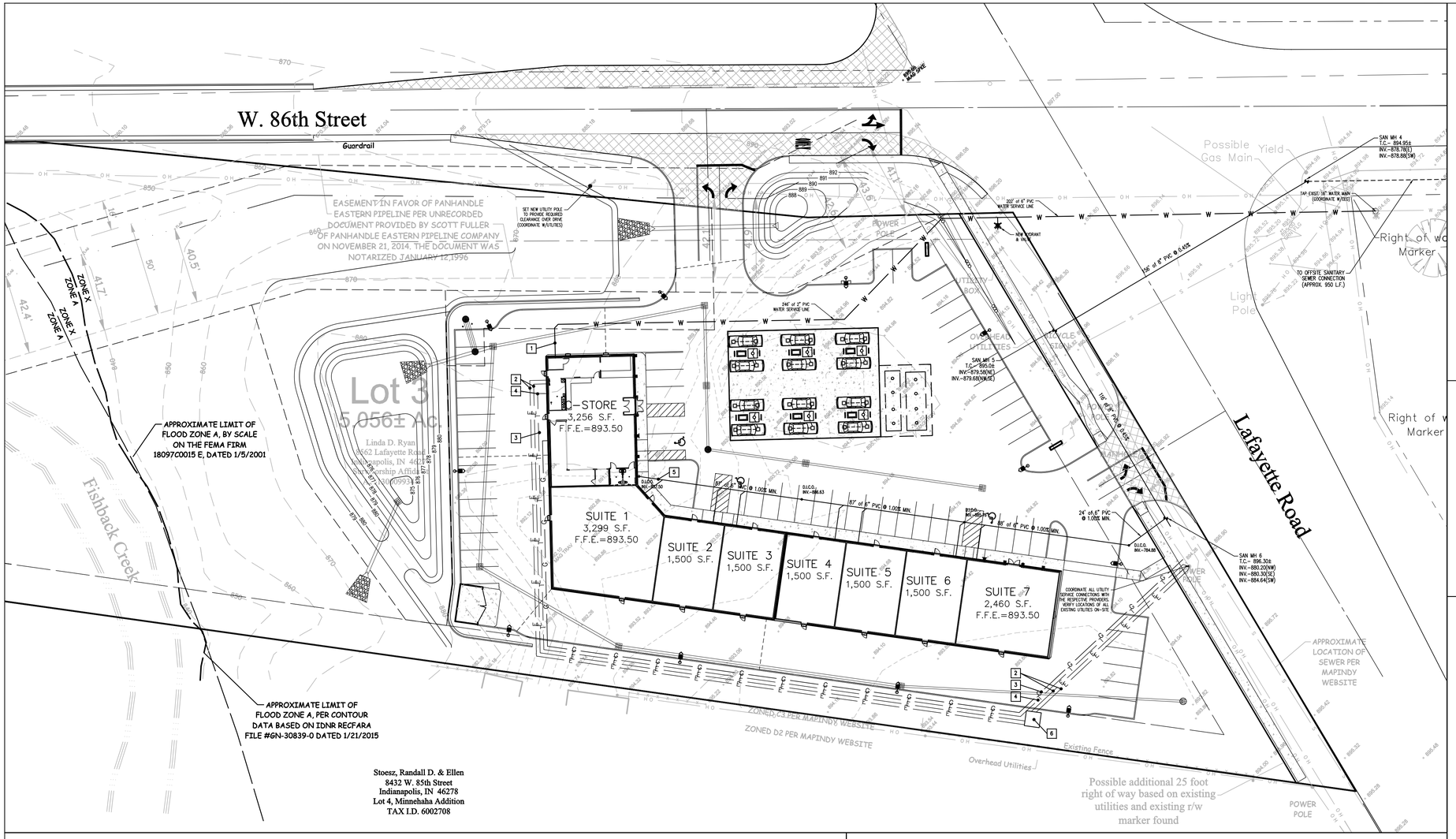

OFF-SITE UTILITY NOTE

EXISTING UTILITIES OUTSIDE OF THE SITE LIMITS WERE NOT LOCATED AS PART OF THE SITE UTILITY LOCATES. THE CONTRACTOR SHALL VERIFY THE LOCATION OF ALL EXISTING UTILITIES OUTSIDE OF THE SITE LIMITS PRIOR TO ANY WORK.

GENERAL NOTES

1. IT SHALL BE THE RESPONSIBILITY OF EACH SUBCONTRACTOR TO VERIFY ALL EXISTING UTILITIES AND CONDITIONS PERTAINING TO THEIR PHASE OF WORK. IT SHALL ALSO BE THE SUBCONTRACTOR'S RESPONSIBILITY TO CONTACT THE OWNERS OF THE VARIOUS UTILITIES FOR PROPER STAKE LOCATION OF EACH UTILITY BEFORE WORK IS STARTED. THE SUBCONTRACTOR SHALL NOTIFY IN WRITING THE OWNER AND THE ENGINEER OF ANY CHANGES, OMISSIONS, OR ERRORS FOUND ON THESE PLANS OR IN THE FIELD BEFORE WORK IS STARTED OR RESUMED.

2. STANDARD SPECIFICATIONS FOR THE LOCAL GOVERNING AGENCY SHALL APPLY FOR ALL SANITARY SEWERS, STORM SEWERS, AND WATER MAINS.

3. ALL PARKING STRIPES ARE TO BE 4" PAINTED (WHITE), HANDICAPPED ACCESS AISLES SHALL BE 4" PAINTED (BLUE).

4. ALL DIMENSIONS ARE TO EDGE OF PAVEMENT OR FACE OF CURB, UNLESS NOTED OTHERWISE.

5. THE EDGE OF EXISTING ASPHALT PAVEMENT SHALL BE PROPERLY SEALED WITH A TACK COAT MATERIAL IN ALL AREAS WHERE NEW ASPHALT PAVEMENT IS INDICATED TO JOIN EXISTING ASPHALT.

6. ANY PART OF THE SANITARY OR STORM SEWER TRENCHES RUNNING UNDER OR WITHIN 5' OF PAVED AREAS TO BE BACKFILLED WITH GRANULAR MATERIAL.

7. ALL WATER MAINS TO HAVE A 54" MINIMUM COVER OVER TOP OF PIPE.

8. WATER SERVICE LINE TO THE BUILDING SHALL HAVE A SHUT-OFF VALVE IN AN ACCESSIBLE LOCATION OUTSIDE OF THE BUILDING.

9. STERILIZATION OF WATER MAIN SHALL BE IN ACCORDANCE WITH STATE BOARD OF HEALTH REQUIREMENTS.

10. EXPANSION JOINTS ARE TO BE PLACED AT ALL WALK INTERSECTIONS AND BETWEEN WALKS AND PLATFORMS. SIDEWALK SCORES ARE TO BE EQUALLY PLACED BETWEEN EXPANSION JOINTS, CONTRACTION JOINTS, AND PERPENDICULAR SIDEWALKS AT 5' INTERVALS OR LESS WITH A CONTRACTION JOINT EVERY 20' OR LESS.

11. REFER TO ARCHITECTURAL PLANS FOR BUILDING DIMENSIONS.

12. ALL 6" PVC SANITARY SEWER LATERALS SHALL BE INSTALLED AT A MINIMUM SLOPE OF 1.04%.

13. ALL LATERALS ARE REQUIRED TO HAVE TRACER WIRE INSTALLED ON THE TOP OF THE PIPE FROM THE SEWER MAIN TO THE CLEANOUT.

14. CONTRACTOR TO REFER TO SITE LIGHTING PLAN FOR LOCATION OF LIGHT POLES.

15. CONTRACTOR TO PROVIDE SUFFICIENT CONDUIT WHERE ELECTRIC LINES CROSS PAVEMENT.

ASSUMED NORTH
SCALE: 1"= 30 '

30 0 30 60 90

Indiana 811
Know what's below.
Call before you dig.

KEY NOTES

1. 2" DOMESTIC WATER SERVICE W/ INTERIOR METER PIT. (PER CITIZENS WATER STANDARDS).
2. PROPOSED ELECTRIC SERVICE LINE (COORDINATE WITH UTILITY PROVIDER).
3. PROPOSED NATURAL GAS SERVICE LINE (COORDINATE WITH UTILITY PROVIDER).
4. PROPOSED TELEPHONE SERVICE LINE (COORDINATE WITH UTILITY PROVIDER).
5. PROPOSED SANITARY SEWER LATERAL (PER CITIZENS SEWER STANDARDS).
6. PROPOSED PAD-MOUNT TRANSFORMER (COORDINATE WITH IPL).

LEGEND

- EXISTING SANITARY SEWER & MANHOLE
- EXISTING STORM SEWER; INLET & M.H.
- EXISTING GAS LINE
- EXISTING WATER LINE
- EXISTING ELECTRIC/TELEPHONE LINE (AERIAL)
- EXISTING UNDERGROUND ELECTRIC LINE
- EXISTING UNDERGROUND TELEPHONE LINE
- EXISTING CABLE TELEVISION LINE
- EXISTING FIRE HYDRANT
- EXISTING VALVE; GAS & WATER
- EXISTING ELECTRIC MANHOLE & TRANSFORMER
- EXISTING TELEPHONE MANHOLE & PEDESTAL
- EXISTING WATER METER
- EXISTING BOLLARDS
- EXISTING AREA LIGHT
- PROPOSED STORM SEWER; INLET, BEE HIVE INLET & M.H.
- PROPOSED ELECTRIC SERVICE
- PROPOSED TELEPHONE SERVICE
- PROPOSED WATER SERVICE
- PROPOSED GAS SERVICE
- PROPOSED SANITARY LATERAL AND CLEANOUT
- D.I.C.O. PROPOSED DUCTILE IRON CLEANOUT
- PROPOSED SANITARY MANHOLE NUMBER

UTILITY NOTE

THE LOCATIONS OF ALL EXISTING UNDERGROUND UTILITIES SHOWN ON THIS PLAN ARE BASED UPON MARKINGS PROVIDED BY IUPPS PRIOR TO THE SURVEY FIELD WORK BEING PERFORMED AND UPON ABOVE GROUND EVIDENCE (INCLUDING, BUT NOT LIMITED TO, MANHOLES, INLETS, VALVES, AND MARKS MADE UPON THE GROUND BY OTHERS) AND ARE SPECULATIVE IN NATURE. THERE MAY ALSO BE OTHER UNDERGROUND UTILITIES FOR WHICH THERE IS NO ABOVE GROUND EVIDENCE OR FOR WHICH NO ABOVE GROUND EVIDENCE WAS OBSERVED. THE EXACT LOCATION OF EXISTING UNDERGROUND UTILITIES SHALL BE VERIFIED BY THE CONTRACTOR PRIOR TO ANY AND ALL CONSTRUCTION.

ROGER WARD ENGINEERING INCORPORATED
CIVIL ENGINEERS - LAND PLANNERS - DEVELOPMENT CONSULTANTS
7474 MOBIL ROAD
INDIANAPOLIS, INDIANA 46278
(317) 251-1738 (FAX) 251-1923
www.rw-engineering.com

SITE UTILITY PLAN

DRAWN BY: DBS
DATE: 01/26/2015
FILE NAME: W5/001/DWG/C100
ADD:

REVISIONS:
1.- 03/19/15 DBS REVISED PER DLZ COMMENTS
2.- 04/03/15 DBS REVISED PER DLZ COMMENTS
4.-

THREE MILE PROPETIES, INC.
PROPOSED C-STORE
& RETAIL SHOPS
8562 LAFAYETTE ROAD
INDIANAPOLIS, INDIANA

ROGER C. WARD, JR.
REGISTERED
No.
PE19800489
STATE OF
INDIANA
PROFESSIONAL ENGINEER

BY:

DATE: mm-dd-2015

SHEET
C102
OF
X

JOB#: TMP.001

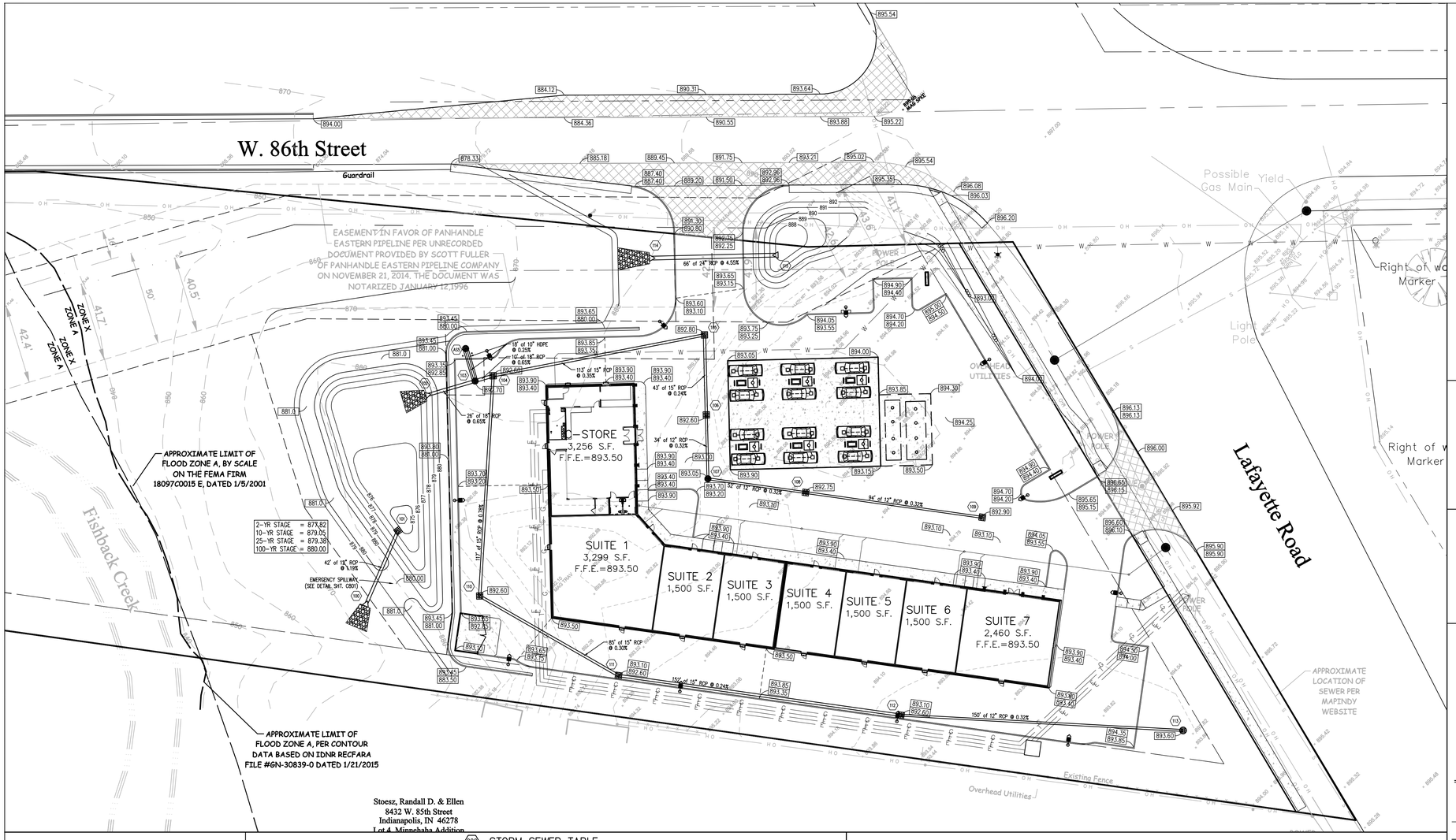

STORM SEWER TABLE

STR #	CASTING	TC/GUT*	DOWNSTREAM PIPE INFORMATION	INVERTS	STRUCTURE TYPE	DETAIL ON SHEET #
100	N/A	N/A	N/A	NE=874.00	END SECTION	C802
101	NEENAH R-3405	880.91	42' of 12" RCP @ 1.19%	SW=874.50	OUTLET CONTROL STRUCTURE	C802
102	N/A	N/A	N/A	NE=877.84	END SECTION	C802
AS5	PROVIDED W/UNIT	893.20	18' of 10" HDPE @ 0.26%	SE=883.06, SE=883.06	BMP STRUCTURE	C105
103	NEENAH R-1772	892.70	26' of 18" RCP @ 0.65% 18' of 10" HDPE @ 0.26%	SW=878.01, NW=883.01, NW=883.11, NE=883.11	STORM MANHOLE DIVERSION STRUCTURE	C802
104	NEENAH R-3405	892.60	10' of 18" RCP @ 0.65%	SW=883.18, NE=887.68, SE=887.68	SPECIAL PAVED AREA INLET	C802
105	NEENAH R-3405	892.80	113' of 15" RCP @ 0.35%	SW=888.07, S=888.17	SPECIAL PAVED AREA INLET	C802
106	NEENAH R-3405	892.60	43' of 15" RCP @ 0.24%	N=888.27, S=888.62	SPECIAL PAVED AREA INLET	C802
107	NEENAH R-1772	893.05	34' of 12" RCP @ 0.32%	N=888.73, SE=888.83	STORM MANHOLE	C802
108	NEENAH R-3405	892.75	52' of 12" RCP @ 0.32%	NW=889.00, SE=889.10	PAVED AREA INLET	C802
109	NEENAH R-3405	892.90	94' of 12" RCP @ 0.32%	NW=889.40	PAVED AREA INLET	C802
110	NEENAH R-3405	892.60	117' of 15" RCP @ 0.78%	N=888.60, SE=888.70	PAVED AREA INLET	C802
111	NEENAH R-3405	892.60	85' of 15" RCP @ 0.30%	NW=888.96, SE=889.06	PAVED AREA INLET	C802
112	NEENAH R-3405	892.60	152' of 15" RCP @ 0.24%	NW=889.42, E=889.77	PAVED AREA INLET	C802
113	NEENAH R-4342	893.60	150' of 12" RCP @ 0.32%	W=890.25	BEEHIVE INLET	C802
114	N/A	N/A	66 LF OF 24" RCP @ 4.55%	W=888.00	END SECTION	C802
115	N/A	N/A	N/A	E=885.00	END SECTION	C802

NOTE: ALL CONCRETE PIPE SHALL INCLUDE O-RING GASKETED JOINTS.

GENERAL NOTES

1. ALL GRADES AT BOUNDARY SHALL MEET EXISTING GRADES.
2. SITE GRADING SHALL NOT PROCEED UNTIL EROSION CONTROL MEASURES HAVE BEEN INSTALLED.
3. ALL SWALES SHALL HAVE A MINIMUM SLOPE OF 2.00%.
4. CONTRACTOR SHALL MINIMIZE DAMAGE TO EXISTING TREES.
5. SLOPES SHALL NOT BE GREATER THAN 3:1 UNLESS OTHERWISE SPECIFIED.
6. REMOVE AND BACKFILL ALL AREAS WHERE ANY FIELD TILE CROSSES PROPOSED BUILDING PADS. ALL FIELD TILES INTERCEPTED TO BE PERPETUATED INTO STORM SEWER SYSTEM. THE SUBCONTRACTOR SHALL NOTIFY IN WRITING THE OWNER AND THE ENGINEER IN ANY CIRCUMSTANCES WHERE THIS CANNOT BE ACCOMPLISHED.
7. THE SUB-GRADE AND ANY FILL PLACED ON-SITE SHALL BE COMPACTED TO A MINIMUM OF 93 PERCENT STANDARD PROCTOR DENSITY (ASTM D-1557). FILL BENEATH THE BASE OF FOOTING ELEVATION AND PARKING LOT AREAS SHALL BE COMPACTED TO 95 PERCENT STANDARD PROCTOR DENSITY (ASTM D-1557). REFER TO PROJECT GEOTECHNICAL REPORT FOR ADDITIONAL REQUIREMENTS.
8. STONE BASE IN PARKING AND DRIVE AREAS SHALL PASS A PROOF ROLL TEST PRIOR TO THE PLACEMENT OF ANY ASPHALT.
9. THE CONTRACTOR SHALL CONFIRM ALL EARTHWORK QUANTITIES PRIOR TO THE START OF CONSTRUCTION. IF AN EXCESS OR SHORTAGE OF EARTH IS ENCOUNTERED, THE CONTRACTOR SHALL CONFIRM WITH THE OWNER AND ENGINEER THE REQUIREMENTS FOR STOCKPILING, REMOVAL OR IMPORTING OF EARTH.
10. ALL STORM SEWER TRENCHES ARE TO BE BACKFILLED WITH GRANULAR MATERIAL.
11. STANDARD SPECIFICATIONS FOR THE LOCAL GOVERNING AUTHORITY SHALL APPLY FOR ALL STORM SEWER CONSTRUCTION.
13. MAXIMUM SLOPE OF 2.00% IN HANDICAPPED PARKING AREAS.
12. ROOF DRAINS AND FOUNDATIONS DRAINS TO BE KEPT SEPARATE. REFER TO ARCHITECTURAL PLANS FOR LOCATION OF FOUNDATION DRAINS AND DOWNSPOUTS.
14. ALL STORM WATER SHALL BE KEPT SEPERATE FROM SANITARY LINES.
15. ALL STORM INLET CASTINGS SHALL HAVE THE WORDS "NO DUMPING, DRAINS TO STREAM" CAST IN RAISED OR RECESSED LETTERS 1" TALL, WITH A SYMBOL OF A FISH.

ASSUMED NORTH
SCALE: 1"= 30 '

30 0 30 60 90

Indiana 811
Know what's below.
Call before you dig.

BENCHMARK NOTE

PIKE 91A

General coordinates: 8562N & 8500N
Sec. 21-17-2: Run in from P 91 MCS, in the NE corner of the porch at 8562 N. Lafayette Road, 0.5' W of the NE corner of the porch, 200' W of the centerline of US 52 and 135' S of W. 86th Street.

ELEV. 898.36

FLOOD NOTE

THIS SITE LIES WITHIN SPECIAL FLOOD HAZARD ZONES "A" & "X" AS SCALED FROM THE FLOOD INSURANCE RATE MAPS (FIRM) FOR CITY OF INDIANAPOLIS, INDIANA, COMMUNITY NUMBER 18097C, PANEL NUMBERS 0015E & 0020E, DATED JANUARY 5, 2001.

PER IDNR E-FARA GN-30839-0 DATED 1/21/15, THE BASE FLOOD ELEVATION FOR THIS SITE IS 838.90' (NAVD 1988 DATUM).

THE MINIMUM FLOOD PROTECTION GRADE IS 842.00'.

LEGEND

- EXISTING SANITARY SEWER & MANHOLE
- EXISTING STORM SEWER; INLET & M.H.
- 710 EXISTING CONTOUR LINE
- 710 PROPOSED CONTOUR LINE
- 760.00 / 759.50 PROPOSED TOP OF CURB/ GUTTER GRADE
- 760.00 PROPOSED GRADE
- PROPOSED STORM SEWER; INLET BEE HIVE INLET, M.H. AND END SECTION
- FLOW ARROWS
- GRADE BREAKS
- SUB-SURFACE DRAIN (SSD)
- (101) PROPOSED STORM STRUCTURE NUMBER

UTILITY NOTE

THE LOCATIONS OF ALL EXISTING UNDERGROUND UTILITIES SHOWN ON THIS PLAN ARE BASED UPON MARKINGS PROVIDED BY IUPPS PRIOR TO THE SURVEY FIELD WORK BEING PERFORMED AND UPON ABOVE GROUND EVIDENCE (INCLUDING, BUT NOT LIMITED TO, MANHOLES, INLETS, VALVES, AND MARKS MADE UPON THE GROUND BY OTHERS) AND ARE SPECULATIVE IN NATURE. THERE MAY ALSO BE OTHER UNDERGROUND UTILITIES FOR WHICH THERE IS NO ABOVE GROUND EVIDENCE OR FOR WHICH NO ABOVE GROUND EVIDENCE WAS OBSERVED. THE EXACT LOCATION OF EXISTING UNDERGROUND UTILITIES SHALL BE VERIFIED BY THE CONTRACTOR PRIOR TO ANY AND ALL CONSTRUCTION.

ROGER WARD ENGINEERING INCORPORATED
CIVIL ENGINEERS - LAND PLANNERS - DEVELOPMENT CONSULTANTS
7474 NOEL ROAD
INDIANAPOLIS, INDIANA 46278
(317) 251-1738 (FAX) 251-1923
www.rw-engineering.com

GRADING AND DRAINAGE PLAN

DRAWN BY: DBS
DATE: 01/26/2015
FILE NAME: TMP/001/DWG/C103
XREF:

REVISIONS:
1.- 02/19/15 DBS REVISED PER DLZ COMMENTS
2.- 04/03/15 DBS REVISED PER DLZ COMMENTS
3.-
4.-

THREE MILE PROPETIES, INC.
PROPOSED C-STORE
& RETAIL SHOPS
8562 LAFAYETTE ROAD
INDIANAPOLIS, INDIANA

ROGER C. WARD JR. REGISTERED No. PE19800489 STATE OF INDIANA PROFESSIONAL ENGINEER

BY:

DATE: mm-dd-2015

SHEET
C103
OF
X

JOB#: TMP.001

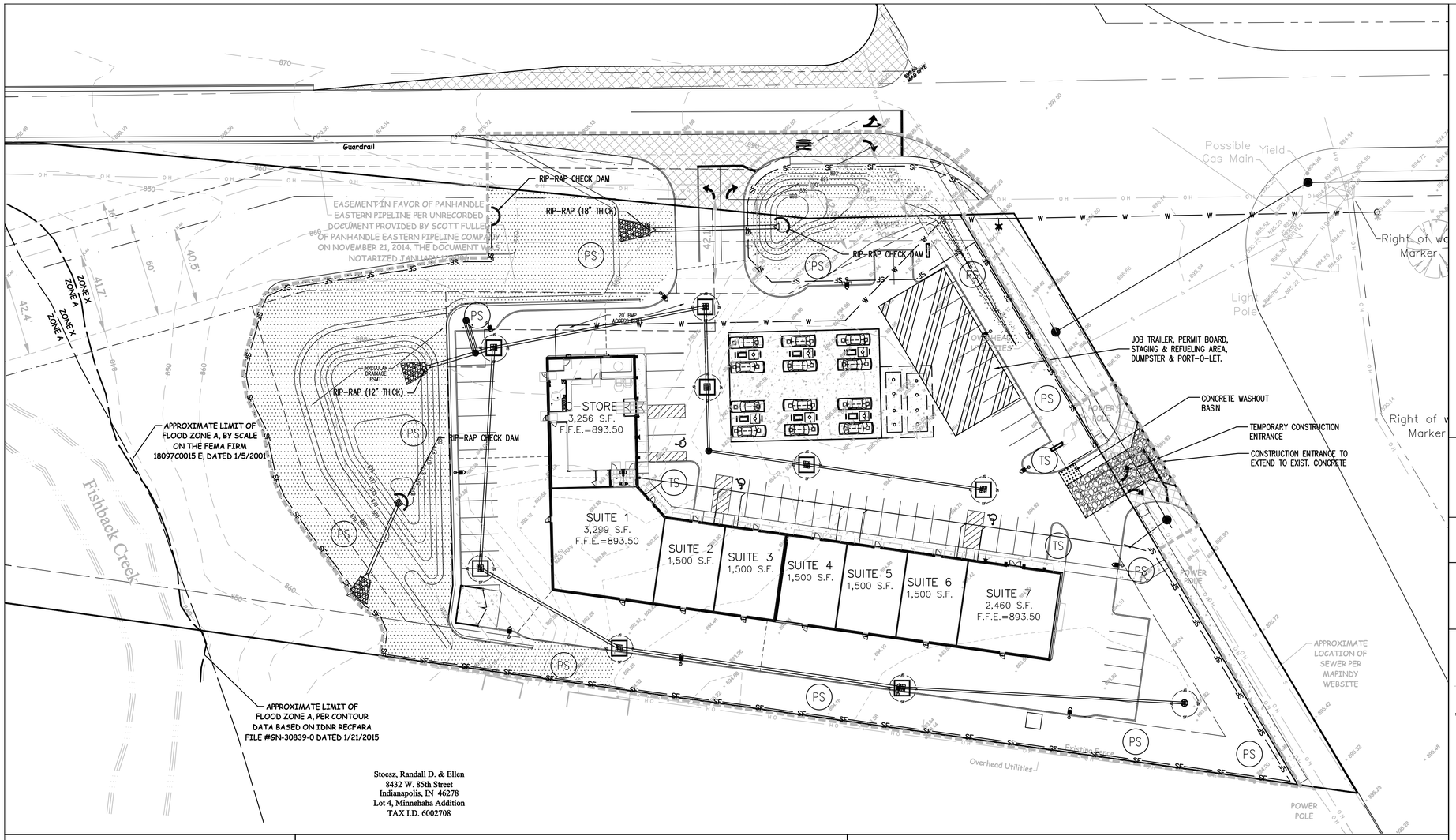

ASSUMED NORTH
SCALE: 1"= 30 '

30 0 30 60 90

Indiana 811
Know what's below.
Call before you dig.

EROSION CONTROL CONTACT

DOUG HUFF
L.D. HUFF CONSTRUCTION
5955 HICKORY WOODS DR.
PLAINFIELD, IN 46168
(317) 837-6777

HYDROLOGIC UINIT CODE

HUC-14: 05120201120090

REQUIRED STATE/FEDERAL WATER QUALITY PERMITS

NONE REQUIRED

LEGEND

- EXISTING STORM SEWER INLET & MANHOLE
- PROPOSED STORM SEWER; INLET BEE HIVE INLET, M.H. AND END SECTION
- EXISTING CONTOUR LINE (710)
- PROPOSED CONTOUR LINE (710)
- EASEMENT BOUNDARY
- RIGHT-OF-WAY
- TS — TEMPORARY SEEDING
- PS — PERMANENT SEEDING
- LIMITS OF CONSTRUCTION
- SF — SILT FENCE
- SILT FENCE INLET PROTECTION
- PAVED AREA INLET PROTECTION
- PROPOSED RIP-RAP
- PROPOSED EROSION CONTROL BLANKET (NORTH AMERICAN GREEN S-75 OR EQUAL)

FIGURE 5-3

Temporary Seedings

Kind of Seed	1000 Sq. Ft.	Acre	Remarks
Wheat or Rye	3.5 lbs.	2 bu.	Cover seed 1" to 1 1/2" deep
Spring Oats	2.3 lbs.	3 bu.	Cover seed 1" deep
Annual ryegrass	1 lb.	40 lbs.	Cover seed 1/4"deep*

* Not necessary where mulch is applied.

Figure 5-2: Permanent Seed Mixtures

Species	Seeding Rate lbs/acre	Seeding Rate lbs/1000 sq. ft.	Suitable pH	Site Suitability* Droughty	well Drained	Wet
Level and Sloping, Open Areas						
1. Tall Fescue	35	.8	5.5–8.3	2	1	2
2. Tall Fescue Red Clover**	25 5	.6 .12	5.5–8.3		1	
3. Kentucky Bluegrass Creeping Red Fescue	15 15	.4 .4	5.5–7.5	2	1	
Steep Banks and Cuts						
4. Tall Fescue Kentucky Bluegrass	15 25	.4 .6	5.8–7.5	2	1	2
5. Tall Fescue Emerald Crownvetch**	35 10	.8 .25	5.5–8.3	2	1	
Lawns and High Maintenance Areas						
6. Kentucky Bluegrass Creeping Red Fescue	40 40	.9 .9	5.8–7.5	2	1	
7. Perennial Ryegrass (Turf Type)	170	4.0	5.0–7.5		1	
8. Tall Fescue	170	4.0	5.5–8.3	2	1	2

* 1 – Preferred 2 – Will Tolerate ** Inoculate with specific Inoculant.

SOILS MAP

SCALE : 1" = 100'

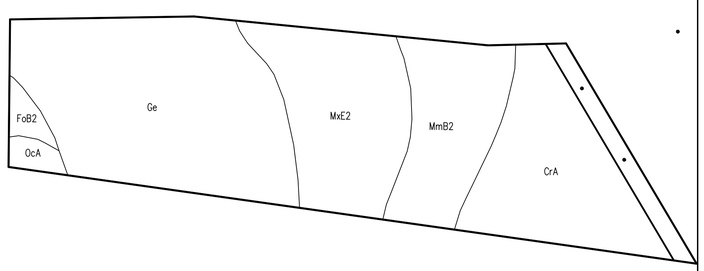

GENERAL NOTES

1. CONTRACTOR SHALL INSTALL ALL REQUIRED SILT FENCES, SILT TRAPS, TREE PROTECTION AND INLET PROTECTION FOR EXISTING INLETS PRIOR TO THE START OF ANY EARTH MOVING OR STRIPPING.

2. CONTRACTOR SHALL INSTALL A STONE CONSTRUCTION ENTRANCE OR SOME OTHER DEVISE PRIOR TO THE START OF EARTHWORK AS NECESSARY TO PREVENT SOIL FROM BEING TRACKED OR WASHED INTO EXISTING ROADWAYS.

3. LAND ALTERATIONS WHICH STRIP THE LAND OF VEGETATION, INCLUDING REGRADING, SHALL BE DONE IN A WAY THAT WILL MINIMIZE EROSION. WHENEVER FEASIBLE, NATURAL VEGETATION SHALL BE RETAINED AND PROTECTED. AS GRADING IS DONE, INSTALL SILT TRAPS, SILT FENCES, SLOPE DRAINS, TEMPORARY DIVERSIONS AND OTHER RUNOFF CONTROL MEASURES AT APPROPRIATE LOCATIONS TO KEEP SEDIMENT CONTAINED ON SITE.

4. ALL DISTURBED AREAS SHALL BE SEEDED AND STRAW MULCHED AS SHOWN ON THE PLANS IMMEDIATELY AFTER COMPLETION OF GROUND ACTIVITY. FOR LARGE PROJECTS, THIS SEEDING SHOULD BE COMPLETED IN PHASES AS THE DIFFERENT AREAS OF THE SITE ARE COMPLETED.

5. PERMANENT AND FINAL VEGETATION OR STRUCTURAL EROSION CONTROL DEVICES SHALL BE INSTALLED AS SOON AS PRACTICAL UNDER THE CIRCUMSTANCES.

6. THE DURATION OF TIME WHICH AN AREA REMAINS EXPOSED SHALL BE KEPT TO A PRACTICAL MINIMUM DEPENDING UPON THE WEATHER. IF CONSTRUCTION ACTIVITY IS TO CEASE FOR MORE THAN TWO WEEKS, THE DISTURBED AREAS SHALL BE TEMPORARILY SEEDED.

7. ALL STORM SEWER INLET PROTECTION DEVICES SHALL BE PUT IN PLACE AT THE TIME EACH INLET IS CONSTRUCTED.

8. THE CONTRACTOR SHALL MAINTAIN EROSION CONTROL MEASURES AND DEVICES DURING CONSTRUCTION AND UNTIL SILTATION OF THE STREETS AND STORM SEWERS WILL NO LONGER OCCUR.

9. ONCE ONSITE EROSION AND SILTATION OF THE STREETS AND STORM SEWERS WILL NO LONGER OCCUR, THE CONTRACTOR SHALL REMOVE AND DISPOSE OF THE TEMPORARY EROSION CONTROL DEVICES.

10. THESE GENERAL PROCEDURES MAY NOT COVER ALL SITUATIONS. REFER TO EROSION CONTROL PLANS FOR SPECIFIC NOTES AND ADDITIONAL DETAILS.

11. EROSION CONTROL TO COMPLY WITH INDIANA 327 IAC AND RULE #5, AND THE INDIANA STORM WATER QUALITY MANUAL.

12. ADDITIONAL EROSION CONTROL MEASURES MAY BE REQUIRED IN THE FIELD BY THE INSPECTOR.

13. DIRT AND DEBRIS SHALL NOT BE TRACKED INTO THE ROADWAYS VIA CONSTRUCTION EQUIPMENT AND PERSONNEL.

14. INLET PROTECTION IS TO BE PROVIDED AT ALL INLETS. SEE SHEET C105 FOR INLET PROTECTION DETAILS.

ROGER WARD ENGINEERING INCORPORATED
CIVIL ENGINEERS - LAND PLANNERS - DEVELOPMENT CONSULTANTS
7474 NOEL ROAD
INDIANAPOLIS, INDIANA 46278
(317) 251-1738 (FAX) 251-1923
www.rw-engineering.com

EROSION CONTROL PLAN

DRAWN BY: DBS
DATE: 01/26/2015
FILE NAME: TMP/001/DWG/C104
ADD:

REVISIONS:
1.- 03/19/15 DBS REVISED PER DLZ COMMENTS
2.- 04/03/15 DBS REVISED PER DLZ COMMENTS
3.-
4.-

THREE MILE PROPETIES, INC.
PROPOSED C-STORE
& RETAIL SHOPS
8562 LAFAYETTE ROAD
INDIANAPOLIS, INDIANA

ROGER C. WARD JR. REGISTERED No. PE19800489 STATE OF INDIANA PROFESSIONAL ENGINEER

BY:

DATE: mm-dd-2015

SHEET
C104
OF
X

JOB#: TMP.001

STANDARD NOTE:

1. System shall be designed for the following capacities:
   Peak Treatment Flow: 4.4 cfs [124 L/s]
   Sediment Storage: 45 ft³ [1.3 m³]
   Oil/Debris Storage: 270 gal. [1022 L]

* Please see accompanied Aqua-Swirl specification notes.
* See Site Plan for actual system orientation.
** Orientation may vary from 90°, 180°, or custom angles to meet site conditions.

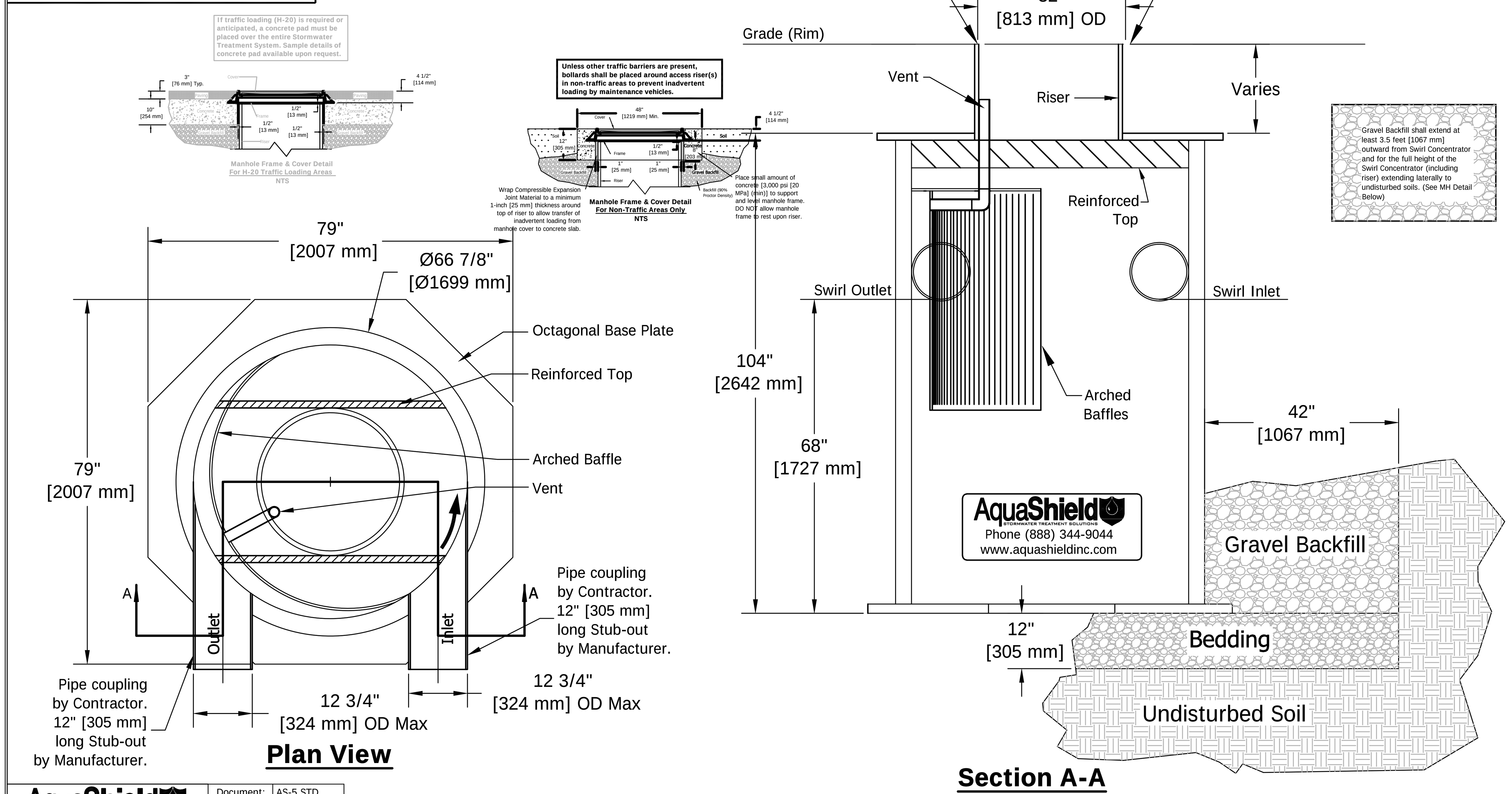

AquaShield 2705 Kanasita Drive, Chattanooga, TN 37343 Phone (888) 344-9044 Fax (423) 826-2112 www.aquashieldinc.com	Document:	AS-5 STD
	Drawn By:	BLR
	Scale:	1:20
	Date:	11/05/08
	U.S. Patent No. 6524473 and other Patent Pending	

Aqua-Swirl Concentrator Model AS-5 Off-Line Horseshoe Standard Detail

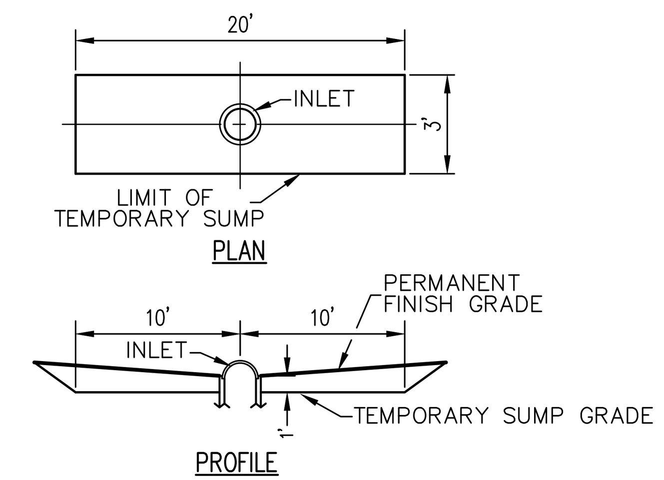

NOTE: TEMPORARY SILTATION SUMPS SHALL BE USED IN ALL AREAS AS SHOWN ON THIS PLAN UNTIL THE PAVEMENT IS PLACED. AT THAT TIME, SAND BAGS SHALL BE UTILIZED.

TEMPORARY SEDIMENT TRAP DETAIL

SCALE: NONE

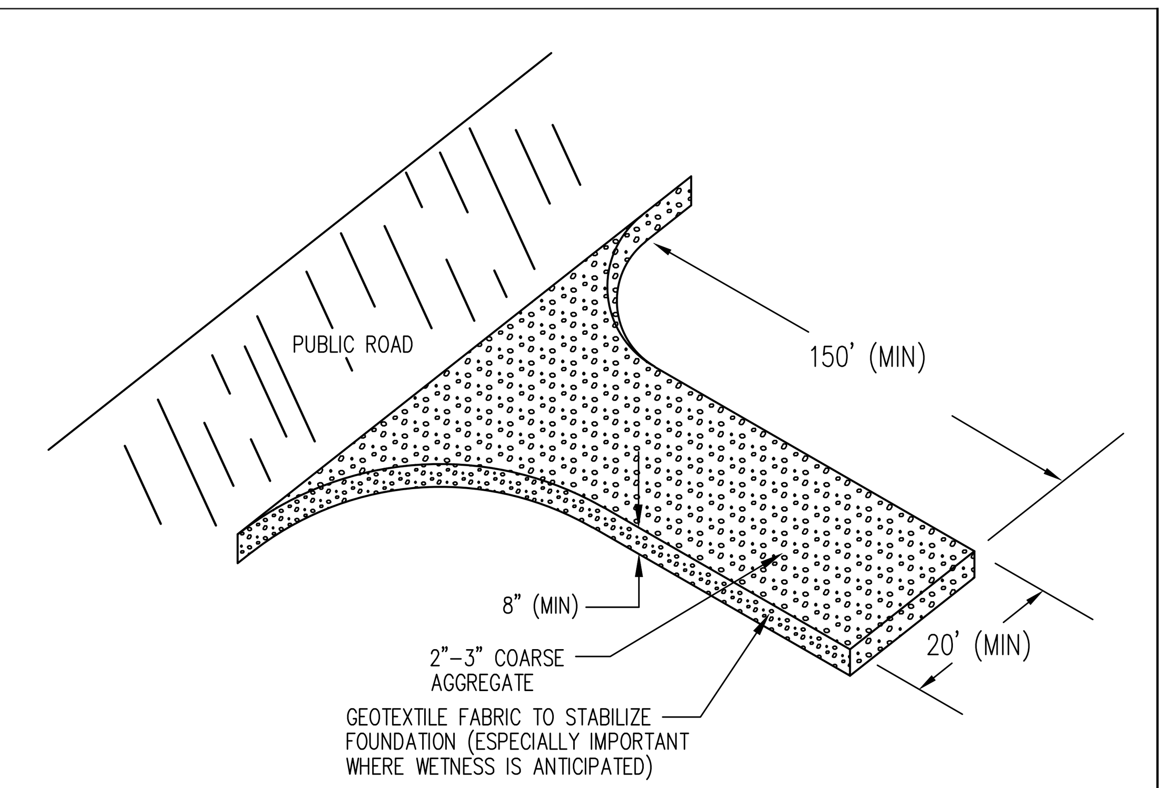

TEMPORARY CONSTRUCTION ENTRANCE DETAIL

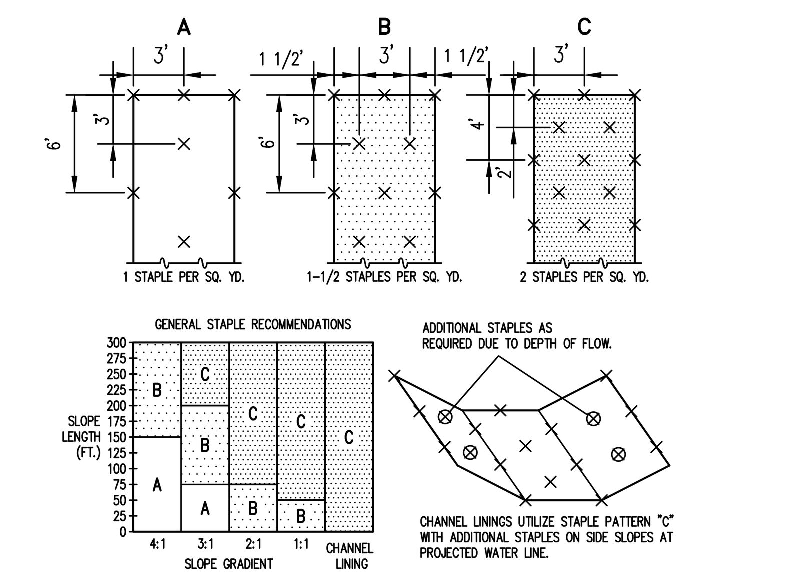

STAPLE PATTERNS APPLY TO ALL NORTH AMERICAN EROSION CONTROL BLANKETS. STAPLE PATTERNS MAY VARY DEPENDING UPON SOIL TYPE AND AVERAGE ANNUAL RAINFALL.

AT SLOPE LENGTHS GREATER THAN 300 FEET OR WHERE DRAINAGE OVER LARGE AREAS IS DIRECTED ONTO THE BLANKETS, STAPLE PATTERN "C" SHOULD BE UTILIZED.

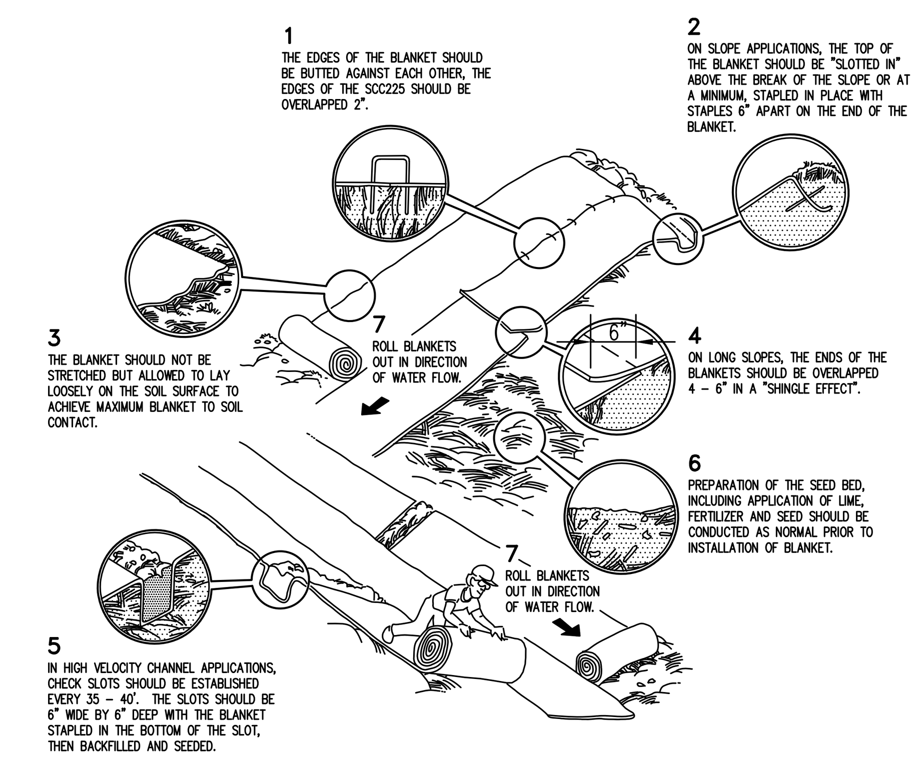

EROSION BLANKET INSTALLATION

MODEL # S–75

	SOIL CONDITION			Shade Tolerance	Close Mowing to 2–3 1/2inches	Tromping Tolerance	Fertility Needs	Winter Hardiness	Flooding Tolerance (days)	Mature Height (inches)	Emergence Time (days)	Salt Tolerance		
	Wet	Norm	Dry									Gen.	Soil	Spray
Creeping Red Fescue Festuca rubra	2	1	2	1	1	1	Med.	1	20–25	12–18	7–21			S
Kentucky Bluegrass Poa pratinsis	2	1	2	1	1	1	Med.	1	25–35	12–18	10–20			MT
Tall Fescue Festuca L arundinacea	2	1	1	1	1	1	Low	1	24–35	24–36	5–14		T	
Perennial ryegrass Lolium perenne	2	1	2	–	1	2	Med–High	2	15–20	12–18	5–10		MT	
Crownvetch Coronilla varia	–	1	1	2	–	–	Low	1	5–10	24	14–21	T		
Red Clover Trifolium pratense	–	1	–	2	–	–	Med.	1	7–10	18	5–10	S	S	

Ranking:
1 Good
2 Medium
– Not tolerant

Salt Tolerance (to both soil salts & spray):
T Tolerance
MT Medium Tolerance
S Slight Tolerance

FIGURE 5–4

Seedbed Preparation

Apply lime to raise the pH to the level needed for species being seeded. Utilize phosphorus-free fertilizer unless required by soils test. Application of 150 lbs. of ammonium nitrate on areas low inorganic matter and fertility will greatly enhance vegetative growth.

Work the fertilizer and lime into the soil to a depth of 2–3 inches with a harrow, disk or rake operated across the slope as much as possible.

Seeding

Select a seed mixture based on projected use of the area (Figure 5–2), while considering best seeding dates. See Figure 5–3 this sheet. If tolerances are a problem, such as salt tolerance of seedings adjacent to streets and highways, see Figure 5–4 this sheet before final selection.

Mulch Rate

Mulch is to be applied at 2,000 to 3,000 pounds per acre in areas not covered by erosion control blanketing. Mulch must be anchored using a mulch anchoring tool or farm disk with dull, serrated, straight set blades, or bulldozer cleats driven up and down slope.

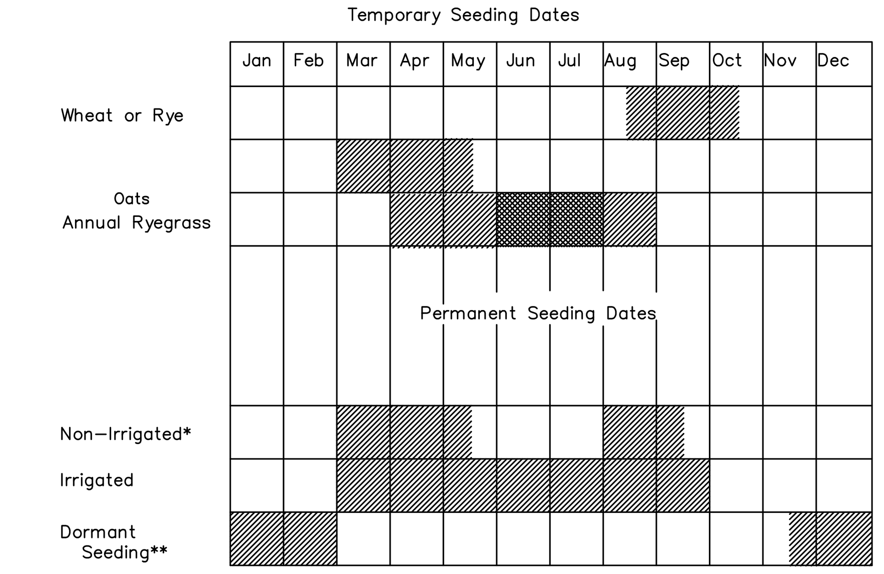

Irrigation needed during this period. To control erosion at times other than in the shaded areas, use mulch.

* Late summer seeding dates may be extended 5 days if mulch is applied.

** Increase seeding application by 50%.

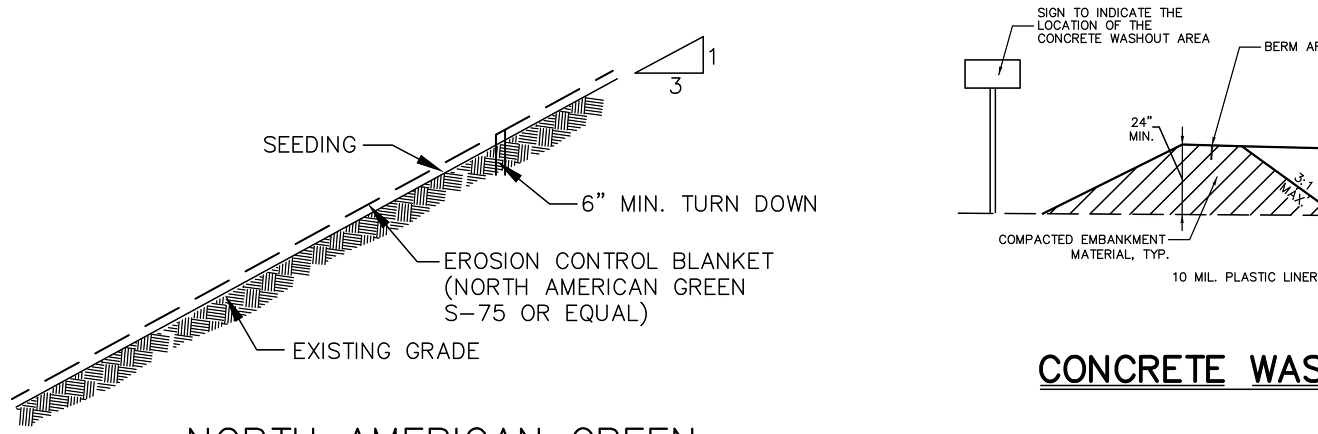

NORTH AMERICAN GREEN

TYPE	LONGEVITY	MAX. SLOPE	APPLICATION
S75	10 MONTHS	3:1	LOW FLOW SWALES
DS75	60 DAYS	3:1	LOW FLOW SWALES
S150	10 MONTHS	2:1	MODERATE DISCHARGE SWALES
DS150	60 DAYS	2:1	MODERATE DISCHARGE SWALES
SC150	2 YEARS	1:1	MEDIUM DISCHARGE SWALES
C125	3 YEARS	>1:1	HIGH DISCHARGE SWALES

EROSION CONTROL MATTING DETAIL

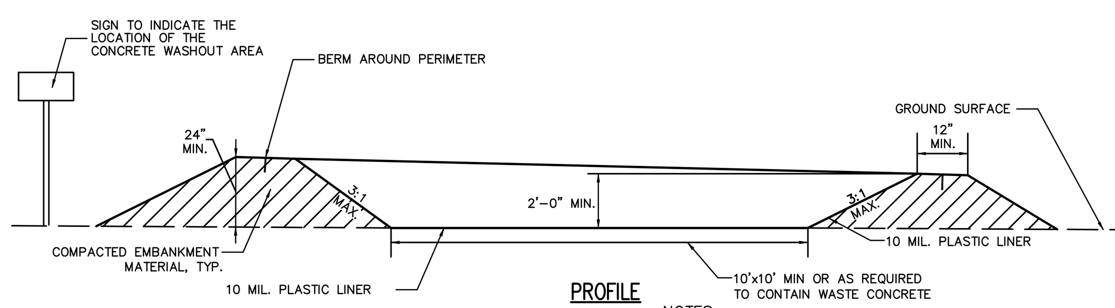

CONCRETE WASHOUT DETAIL

SCALE: NONE

NOTES:

1. CONCRETE WASHOUT AREA SHALL BE INSTALLED PRIOR TO ANY CONCRETE PLACEMENT ON SITE.
2. SIGNS SHALL BE PLACED AT THE CONSTRUCTION ENTRANCE, AT THE WASHOUT AREA, AND ELSEWHERE AS NECESSARY TO CLEARLY INDICATE THE LOCATION OF THE CONCRETE WASHOUT AREA TO OPERATORS OF CONCRETE TRUCKS AND PUMP RIGS.
3. THE CONCRETE AREA SHALL BE REPAIRED AND ENLARGED OR CLEANED OUT AS NECESSARY TO MAINTAIN CAPACITY FOR WASTED CONCRETE.
4. AT THE END OF CONSTRUCTION, ALL CONCRETE SHALL BE REMOVED FROM THE SITE AND DISPOSED OF AT AN ACCEPTED WASTE SITE.
5. WHEN THE CONCRETE WASHOUT AREA IS REMOVED, THE DISTURBED AREA SHALL BE SEEDED AND MULCHED OR OTHERWISE STABILIZED IN A MANNER ACCEPTED BY THE CITY.

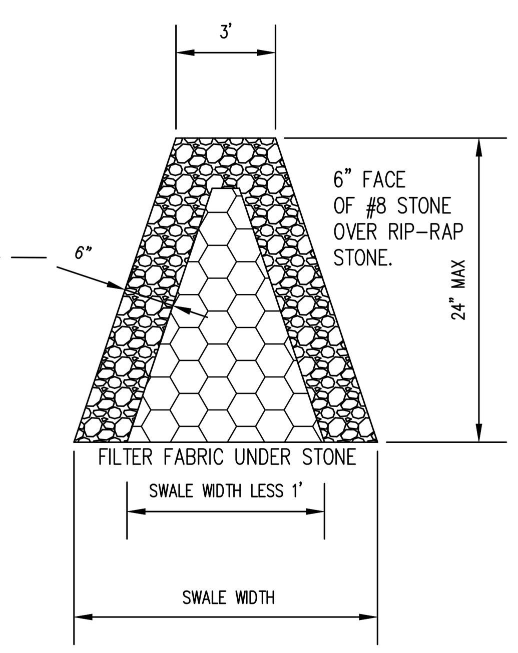

ROCK CHECK DAM

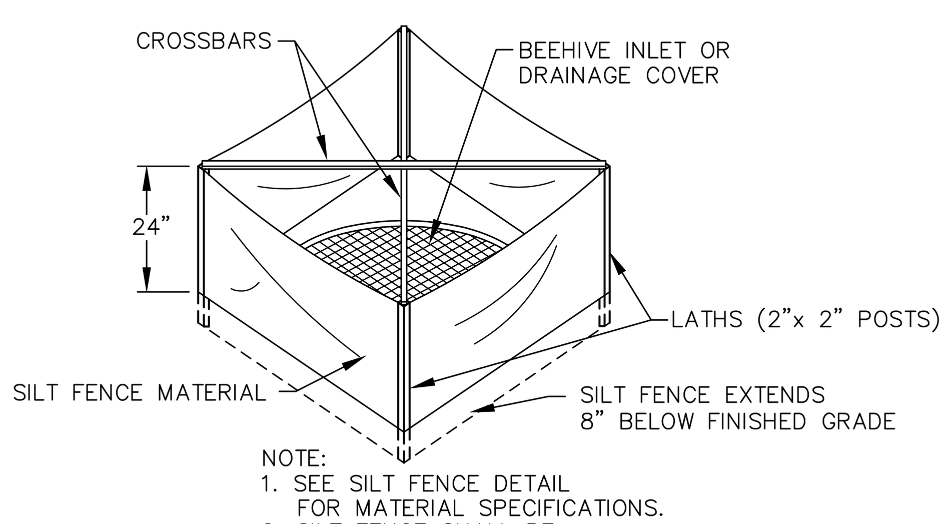

NOTE:
1. SEE SILT FENCE DETAIL FOR MATERIAL SPECIFICATIONS.
2. SILT FENCE SHALL BE PREASSEMBLED BY SUPPLIER.

INLET PROTECTION – SILT FENCE

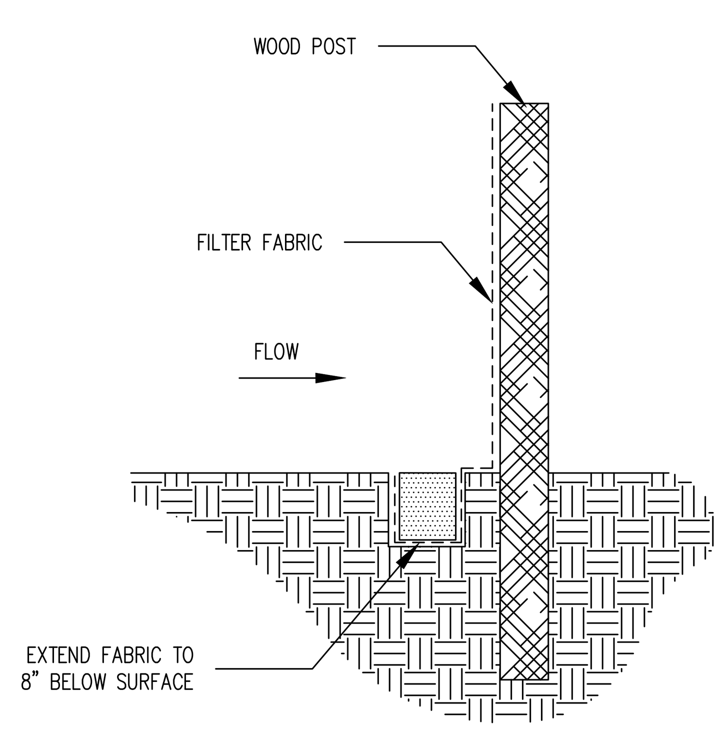

SILT FENCE

Silt Fence shall be a machine produced, non-woven geotextile of 100% polypropylene meeting the physical properties below.

All stakes shall be 2" X 2" hardwood 36" tall with 24" tall lath stapled to stakes over fabric as reinforcement.

All silt fence shall be prefabricated by the supplier. No field assembly will be accepted.

Fabric Weight	4 oz/syd
Grab Strength	Warp 125 lbs.
Elongation	Warp 50 %
Trapezoidal Tear Strength	50 lbs.
Burst Strength	200 psi
UV Resistance	> 70 %
A.O.S.	50–80
Slurry Flow Rate	225 gpm/sq. ft
Sediment Retention	75 %

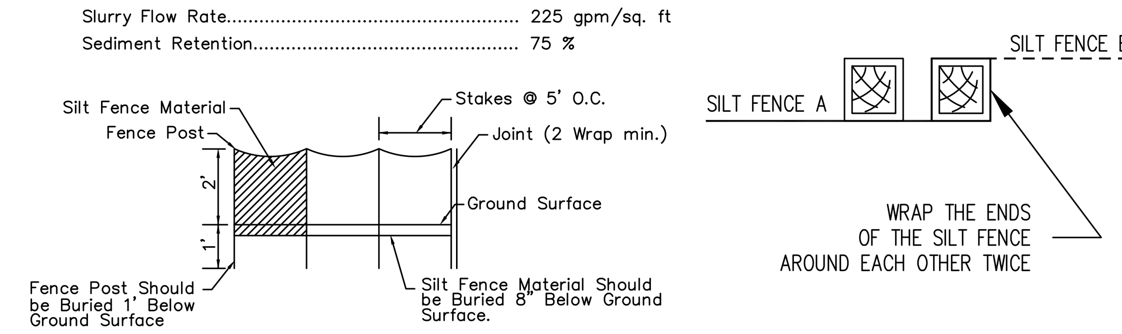

SILT FENCE DETAIL

(N.T.S.)

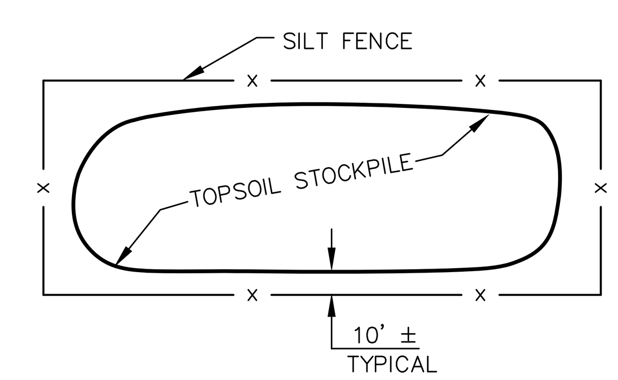

TYPICAL TOPSOIL STOCKPILE

EROSION CONTROL CONTACT

DOUG HUFF
L.D. HUFF CONSTRUCTION
5955 HICKORY WOODS DR.
PLAINFIELD, IN 46168
(317) 837–6777

ROGER WARD ENGINEERING INCORPORATED
CIVIL ENGINEERS - LAND PLANNERS - DEVELOPMENT CONSULTANTS
7474 NOEL ROAD
INDIANAPOLIS, INDIANA 46278
(317) 251-1738 (FAX) 251-1923
www.rw-engineering.com

EROSION CONTROL DETAILS

DRAWN BY: DBS
DATE: 01/26/2015
FILE NAME: TMP/001/DWG/C105
XREF:

REVISIONS:
1.– 03/18/15 DBS REVISED PER DLZ COMMENTS
2.– 04/03/15 DBS REVISED PER DLZ COMMENTS
3.–
4.–

THREE MILE PROPETIES, INC.
PROPOSED C-STORE & RETAIL SHOPS
8562 LAFAYETTE ROAD
INDIANAPOLIS, INDIANA

ROGER C. WARD JR. REGISTERED No. PE19800489 STATE OF INDIANA PROFESSIONAL ENGINEER

BY:

DATE: mm–dd–2015

SHEET C105 OF X

JOB#: TMP.001

(A3) PROJECT DESCRIPTION

The site is located near the intersection of West 86th Street and Lafayette Road in Indianapolis, Indiana. The overall site is approximately 5.06 acres and disturbed area is approximately 2.59 acres. The existing site was previously developed as a single-family residence. Estimated start of construction-May 2015 and completion-November 2015.

(A4) VICINITY MAP

The vicinity map showing the project location can be seen on sheet C100.

(A5) LEGAL DESCRIPTION

The land description can be seen on sheet C101.

Latitude: # 39° 54' 33"
Longitude: # 86° 18' 43"

(A6) LOT LOCATION AND SITE IMPROVEMENTS

The lot boundaries, utility locations, driveways, structures and parking areas can be seen on the site plan (Sheet C101).

(A7) HYDROLOGIC UNIT CODE

HUC-14: # 05120201120090

(A8) REQUIRED STATE OR FEDERAL WATER QUALITY PERMITS

None.

(A9) STORMWATER DISCHARGE POINTS

Stormwater from the proposed improvements will be collected by the proposed storm sewer system and outlet into a new detention basin located at the west side of the site. The detention basin outlets into a swale that drains into Fishback Creek. with the ultimate receiving waters being Fishback Creek (Eagle Creek Reservoir)..

(A10) SITE WETLANDS, LAKES AND WATER COURSES

N/A.

(A11) RECEIVING WATERS

Stormwater from the proposed improvements will be collected by the proposed storm sewer system and detention basin. The drainage system will outlet into an existing storm sewer system. The ultimate receiving water is Fishback Creek (Eagle Creek Reservoir).

(A12) POTENTIAL DISCHARGES TO GROUNDWATER

No sinkholes or uncapped abandoned wells have been identified on the project site or downstream of the project site.

(A13) 100 YEAR FLOODPLAIN, FLOODWAYS AND FRINGES

A portion of the property lies within Zone A per FIRM Map Panel 18097C0019 and 18097C0020, dated January 5, 2001. The proposed development does not lie within the limits of a 100-yr floodplain.

(A14) ESTIMATED PEAK DISCHARGE

EXISTING

Existing Conditions: 2-year run-off 0.19 cfs
Existing Conditions: 10-year run-off 0.66 cfs

These numbers were calculated using the SCS-II method with Huff rainfall distributions.

PROPOSED

Proposed Conditions: 2-year run-off 0.21 cfs
Proposed Conditions: 10-year run-off 0.44 cfs
Proposed Conditions: 25-year run-off 0.65 cfs
Proposed Conditions: 100-year run-off 0.96 cfs

These numbers were calculated using the SCS-II method with Huff rainfall distributions.

(A15) ADJACENT LAND USE

The existing land uses adjacent to the site are as follows:

North: C1/C3 (Commercial)
West: DA (Residential)
South: D2 (Residential)
East: SU2 (School)

(A16) CONSTRUCTION LIMITS

The overall disturbed area is approximately 2.58 acres. Please see sheet C104 for the limits of construction.

(A17) EXISTING VEGETATIVE COVER

The existing site was previously developed as a single-family residence. The site is mainly wooded and lawn areas.

(A18) SOILS MAP

See sheet C104 for the soils map. Soil maps from the United States Department of Agriculture, Soil Conservation Service, identify Crosby silt loam, 0 to 2 percent slopes, (CrA – 39% site), Miami silt loam, 2 to 6 percent slopes, eroded (MmB2 – 26% site) and Miami complex, 18 to 24 percent slopes, eroded (MxE2 – 35% site). This soil profile only accounts for the portion of the site that is to be developed. The Miami soil is a Type 'B' soil and the Crosby soil is a Type 'C' soil.

Miami soils nearly level, very poorly drained soils. Runoff is generally slow to medium. Miami soils have slight to moderate limitations for most non-farm uses.

Crosby silt loam soils are nearly level soils. Runoff is generally slow and permeability is slow. The soil has severe limitations for most nonfarm uses.

(A20) OFF-SITE CONSTRUCTION PLAN

N/A

(A21) SOIL STOCKPILE, BORROW AND/OR DISPOSAL

A soil stockpile may be needed for the project site. Stockpile areas are identified on sheet C104.

(B1) POTENTIAL CONSTRUCTION POLLUTANTS

Potential pollutants sources relative to a construction site may include, but are not limited to material and fuel storage areas, fueling locations, exposed soils and leaking vehicle/equipment. Potential pollutants that may appear at the site due to construction activities include, but are not limited to diesel fuel, gasoline, concrete and concrete washout, solid waste, sediment, paint and solvents, equipment repair products, anti-freeze and fertilizer.

(B2) STORMWATER QUALITY SEQUENCE

STEP # 1: CONTRACTOR TO SETUP PRE-CONSTRUCTION MEETING WITH DEPARTMENT OF CODE ENFORCEMENT AND MARION COUNTY SOIL & WATER CONSERVATION OFFICE PRIOR TO CONSTRUCTION. CONTRACTOR TO INSTALL CONSTRUCTION STAGING AREA, PLACE PERIMETER SILT FENCE AND EXISTING INLET SEDIMENT PROTECTION PRIOR TO THE PRE-CON MEETING.
(1 WEEK PRIOR TO THE START OF CONSTRUCTION).

STEP # 2: OVERALL EARTH WORK SHALL BEGIN THE SECOND WEEK OF CONSTRUCTION, INCLUDING STRIPPING TOPSOIL, EXCAVATING THE DETENTION POND, PREPARING PARKING LOT SUBGRADE, AND PREPARING THE BUILDING PAD. TEMPORARY SEED ALL DISTURBED AREAS IF CONSTRUCTION ACTIVITIES ARE NOT ANTICIPATED WITHIN TEN DAYS AFTER INITIAL DISTURBANCE.
(THROUGHOUT THE DURATION OF THE PROJECT)

STEP # 3: CONSTRUCTION OF STORM SEWER, SANITARY LATERAL, WATERLINE, AND UTILITIES MAY BEGIN. INSTALL INLET SEDIMENT BARRIERS UPON CONSTRUCTION OF INLETS. AN EXCAVATED DROP INLET SHALL BE PLACED UNTIL INLETS HAVE PAVEMENT AROUND THEM AND SEDIMENT BARRIERS CAN BE PLACED. (WITHIN ONE MONTH OF CONSTRUCTION)

STEP # 4: CONTRACTOR SHALL TEMPORARY SEED ANY DISTURBED AREAS DURING CONSTRUCTION OF STORM SEWER, SANITARY SEWER, WATERLINE, UTILITIES OR ROADWAYS. (THROUGHOUT THE DURATION OF THE PROJECT)

STEP # 5: FINISH GRADE SWALES, SLOPES, & MOUNDS. SEED ALL AREAS AS NOTED, AND INSTALL EROSION CONTROL BLANKETING WHERE NOTED.

STEP # 6: COMPLETE DRIVE AISLES/PARKING AREAS. INSTALL PAVEMENT AREA INLET PROTECTION.

STEP # 7: CONSTRUCT BUILDING AND FINAL GRADE OF LANDSCAPE AREAS.

STEP # 8: INSTALL LANDSCAPING AND FINAL SEEDING. SUBMIT IDEM NOT TO IDEM.

NOTE: INSTALL TEMPORARY SEEDING AFTER A SPECIFIC STAGE OF CONSTRUCTION HAS BEEN COMPLETED (TEMPORARY OR FINAL) WHERE AREAS WILL BE IDLE OF CONSTRUCTION ACTIVITIES FOR A PERIOD OF 15 DAYS OR MORE.

GENERAL NOTES

1. CONTRACTOR TO SETUP PRECON MEETING WITH MCSWCD PRIOR TO ANY DEMOLITION/EARTH DISTURBING ACTIVITIES. CONTRACTOR SHALL INSTALL ALL REQUIRED SILT FENCES, SILT TRAPS, TREE PROTECTION AND INLET PROTECTION FOR EXISTING INLETS PRIOR TO THE START OF ANY EARTH MOVING OR STRIPPING.

2. CONTRACTOR SHALL INSTALL A STONE CONSTRUCTION ENTRANCE OR SOME OTHER DEVISE PRIOR TO THE START OF EARTHWORK AS NECESSARY TO PREVENT SOIL FROM BEING TRACKED OR WASHED INTO EXISTING ROADWAYS.

3. LAND ALTERATIONS WHICH STRIP THE LAND OF VEGETATION, INCLUDING REGRADING, SHALL BE DONE IN A WAY THAT WILL MINIMIZE EROSION. WHENEVER FEASIBLE, NATURAL VEGETATION SHALL BE RETAINED AND PROTECTED. AS GRADING IS DONE, INSTALL SILT TRAPS, SILT FENCES, SLOPE DRAINS, TEMPORARY DIVERSIONS AND OTHER RUNOFF CONTROL MEASURES AT APPROPRIATE LOCATIONS TO KEEP SEDIMENT CONTAINED ON SITE.

4. ALL DISTURBED AREAS SHALL BE SEEDED AND STRAW MULCHED AS SHOWN ON THE PLANS IMMEDIATELY AFTER COMPLETION OF GROUND ACTIVITY. FOR LARGE PROJECTS, THIS SEEDING SHOULD BE COMPLETED IN PHASES AS THE DIFFERENT AREAS OF THE SITE ARE COMPLETED.

5. PERMANENT AND FINAL VEGETATION OR STRUCTURAL EROSION CONTROL DEVICES SHALL BE INSTALLED AS SOON AS PRACTICAL UNDER THE CIRCUMSTANCES.

6. THE DURATION OF TIME WHICH AN AREA REMAINS EXPOSED SHALL BE KEPT TO A PRACTICAL MINIMUM DEPENDING UPON THE WEATHER. IF CONSTRUCTION ACTIVITY IS TO CEASE FOR MORE THAN TWO WEEKS, THE DISTURBED AREAS SHALL BE TEMPORARILY SEEDED.

7. ALL STORM SEWER INLET PROTECTION DEVICES SHALL BE PUT IN PLACE AT THE TIME EACH INLET IS CONSTRUCTED.

8. THE CONTRACTOR SHALL MAINTAIN EROSION CONTROL MEASURES AND DEVICES DURING CONSTRUCTION AND UNTIL THE NOTICE OF TERMINATION IS APPROVED.

9. ONCE ONSITE EROSION AND SILTATION OF THE STREETS AND STORM SEWERS WILL NO LONGER OCCUR, THE CONTRACTOR SHALL REMOVE AND DISPOSE OF THE TEMPORARY EROSION CONTROL DEVICES.

10. THESE GENERAL PROCEDURES MAY NOT COVER ALL SITUATIONS. REFER TO EROSION CONTROL PLANS FOR SPECIFIC NOTES AND ADDITIONAL DETAILS

11. EROSION CONTROL TO COMPLY WITH INDIANA 327 IAC AND RULE #5, AND INDIANA HANDBOOK FOR EROSION CONTROL IN DEVELOPING AREAS

12. ADDITIONAL EROSION CONTROL MEASURES MAY BE REQUIRED IN THE FIELD BY THE INSPECTOR.

(B3) CONSTRUCTION ENTRANCE INFORMATION

The location of the construction entrance is on sheet C104. The construction entrance specifications are on sheet C105. Geotextile fabric shall be placed under the stone layer of the construction entrance.

(B4) SHEET FLOW SEDIMENT CONTROL

The use of silt fence will be used as erosion control measures for sheet flows. The location of each measure can be seen on sheet C104. The details and specifications for each stated sediment control measure is on sheet C105.

(B5) CONCENTRATED FLOW SEDIMENT CONTROL

Temporary seeding will be used as erosion control measures for concentrated flows. The location of each measure is located on sheet C104. The details and specifications for each stated sediment control measure is on sheet C105.

(B6) INLET PROTECTION LOCATIONS AND SPECS

The location of each inlet protection measure is on sheet C104. The details and specifications for each inlet measure are on sheet C105.

(B7) RUNOFF CONTROL MEASURES

The runoff control measures are the same as those listed for sheet and concentrated flow control. The locations of each measure are on sheet C104. The details and specifications of each runoff control measure are on sheet C105.

(B8) OUTLET PROTECTION SPECIFICATIONS

Rock check dams will be used for outlet protection. The locations of outlet protection measures are shown on sheet C104. The details and specifications for each stated measure are provided on sheet C105.

(B9) GRADE STABILIZATION MEASURES

Erosion control blanket and seeding will be used for grade stabilization on areas with slopes of 3:1 or greater. The location of each grade stabilization measure is shown on sheet C104. The details and specifications for each stated measure are provided on sheet C105.

(B10) STORMWATER QUALITY DETAILS

The use of a hydro-dynamic separator will provide for the stormwater quality requirements. The location of stormwater quality measures are on sheet C104. The stormwater quality specifications are provided on sheet C802.

(B11) TEMPORARY SURFACE STABILIZATION

Temporary seeding will be used as temporary surface stabilization measures. The location of each temporary surface stabilization measure are on sheet C104. The details and specifications for each stated measure are on sheet C105.

(B12) PERMANENT SURFACE STABILIZATION

Permanent seeding will be used as permanent surface stabilization measures. The location of each permanent surface stabilization measure are on sheet C104. The details and specifications for each stated measure are on sheet C105.

(B13) MATERIAL HANDLING AND SPILL PREVENTION

Expected materials that may appear at the site due to construction activities include, but are not limited to petroleum products, fertilizers, paint and solvents, and concrete. Materials shall be stored in the designated material storage area.

Spill prevention for vehicle and equipment fueling shall conform to the following practices: vehicle equipment fueling procedures and practices are designed to prevent fuel spills and leaks, and reduce or eliminate contamination of stormwater. This can be accomplished by using offsite facilities, fueling in designated areas only, enclosing or covering stored fuel, implementing spill controls, and training employees and subcontractors in proper fueling procedures. Limitations: Onsite vehicle and equipment fueling should only be used where it is impractical to send vehicles and equipment offsite for fueling. Sending vehicles and equipment offsite should be done in conjunction with a Stabilized Construction Entrance/Exit. Implementation: Use offsite fueling stations as much as possible. Discourage "topping-off" of fuel tanks. Absorbent spill cleanup materials and spill kits should be available in fueling areas and on fueling trucks, and should be disposed of properly after use. Drip pans or absorbent pads should be used during vehicle and equipment fueling, unless the fueling is performed over an impermeable surface in a dedicated fueling area. Use absorbent materials on small spills. Do not hose down or bury the spill. Remove the absorbent materials promptly and dispose of properly. Avoid mobile fueling of mobile construction equipment around the site; rather, transport the equipment to designated fueling areas. Train employees and subcontractors in proper fueling and cleanup procedures. Dedicated fueling areas should be protected from stormwater runon and runoff, and should be located at least 50 ft away from downstream drainage facilities and watercourses. Fueling must be performed on level-grade area. Protect fueling areas with berms and dikes to prevent runon, runoff, and to contain spills. Nozzles used in vehicle and equipment fueling should be equipped with an automatic shutoff to control drips. Fueling operations should not be left unattended. Federal, state, and local requirements should be observed for any stationary above ground storage tanks.

Vehicles and equipment should be inspected each day of use for leaks. Leaks should be repaired immediately or problem vehicles or equipment should be removed from the project site. Keep ample supplies of spill cleanup materials onsite. Immediately clean up spills and properly dispose of contaminated soils.

Spill prevention for solid waste shall conform to the following practices: Solid waste management procedures and practices are designed to prevent or reduce the discharge of pollutants to stormwater from solid or construction waste by providing designated waste collection areas and containers, arranging for regular disposal, and training employees and subcontractors. Solid waste generated from trees and shrubs removed during land clearing, demolition of existing structures, and building construction. Packaging materials including wood, paper, and plastic. Scrap or surplus building materials including scrap metals, rubber, plastic, glass pieces and masonry products. Domestic wastes including food containers such as beverage cans, coffee cups, paper bags, plastic wrappers, and cigarettes. Construction wastes including brick, mortar, timber, steel and metal scraps, pipe and electrical cuttings, non-hazardous equipment parts, Styrofoam and other package construction materials. Select designated waste collection areas onsite. Inform trash-hauling contractors that you will accept only watertight dumpsters for onsite use. Inspect dumpsters for leaks and repair any dumpster that is not watertight. Provide an adequate number of containers with lids or covers that can be placed over the container to keep rain out or to prevent loss of wastes when it is windy. Plan for additional containers and more frequent pickup during the demolition phase of construction. Collect site trash daily, especially during rainy and windy conditions. Remove this solid waste promptly since erosion and sediment control devices tend to collect litter. Make sure that toxic liquid wastes (sued oils, solvents and paints) and chemicals (acids, pesticides, additives, curing compounds) are not disposed of in dumpsters designed for construction debris. Do not hose out dumpsters on the construction site. Leave dumpster cleaning to the trash hauling contractor. Arrange for regular waste collection before containers overflow. Clean up immediately if a container does spill. Make sure that construction waste is collected, removed, and disposed of only at authorized disposal areas. Solid waste storage areas should be located at least 50 ft from drainage facilities and watercourses and should not be located in areas prone to flooding or ponding. Inspect construction waste area regularly. Arrange for regular waste collection.

Spill prevention for concrete washout shall conform to the following practices: Store dry and wet materials under cover, away from drainage areas. Avoid mixing excess amounts of fresh concrete. Perform washout of concrete trucks offsite or in designated areas only. Do not wash out concrete trucks into storm drains, open ditches, streets, or streams. Do not allow excess concrete to be duped onsite, except in designated areas. Locate washout areas at least 50 ft from storm drains, open ditches, or water bodies. Do not allow runoff from this area by constructing a temporary pit or bermed area large enough for liquid and solid waste. Wash out wastes into the temporary pit where the concrete can set, be broken up, and then disposed properly. Avoid creating runoff by draining water to a bermed or level area when washing concrete to remove fine particles and expose the aggregate. Do not wash sweepings from exposed aggregate concrete into the street or storm drain. Collect and return sweepings to aggregate base stockpile or dispose in the trash.

The cleanup parameters shall conform to the following practices: The developer / homeowners association shall be continually kept informed, maintain lists of qualified contractors and available Vac-trucks, tank pumpers and other equipment readily accessible for cleanup operations. In addition, a continually updated list of available absorbent materials and cleanup supplies should be kept on site. All maintenance personnel will be made aware of techniques for prevention of spills. They will be informed of the requirements and procedures outlined in this plan. They will be kept abreast of current developments or new information on the prevention of spills and / or necessary alteration to this plan. When spills occur which could endanger human life and this become primary concern, the discharge of the life saving protection function will be carried out by the local police and fire departments. Absorbent materials, which are used in cleaning up spilled materials, will be disposed of in a manner subject to the approval of the Indiana Department of Environmental Management. Flushing of spilled material with water will not be permitted unless so authorized by the Indiana Department of Environmental Management.

Spill prevention for vehicle and equipment maintenance shall conform to the following practices: Prevent or reduce the contamination of stormwater resulting from vehicle and equipment maintenance by running a "dry and clean site". The best option would be to perform maintenance activities at an offsite facility. If this option is not available then work should be performed in designated areas only, while providing cover for materials stored outside, checking for leaks and spills, and containing and cleaning up spills immediately. These procedures are suitable on all construction projects where an onsite yard area is necessary for storage and maintenance of heavy equipment and vehicles. Onsite vehicle and equipment maintenance should only be used where it is impractical to send vehicles and equipment offsite for maintenance and repair. Sending vehicles / equipment offsite should by done in conjunction with a stabilized construction entrance / exit. Out door vehicle or equipment maintenance is a potentially significant source of stormwater pollution. Activities that can contaminate stormwater include engine repair and service, changing or replacement of fluids, and outdoor equipment storage and parking (engine fluid leaks). If maintenance must occur onsite, use designated areas, located away from drainage courses. Dedicated maintenance areas should be protected from stormwater runon and runoff, and should be located at least 50 ft from downstream drainage facilities and water courses. Drip pans or absorbent pads should be used during vehicle and equipment maintenance work that involves fluids, unless the maintenance work is performed over and impermeable surface in a dedicated maintenance area. Place a stockpile of spill cleanup materials where it will be readily accessible. All fueling trucks and fueling areas are required to have spill kits and/or use other spill protection devices. Use absorbent materials on small spills. Remove the absorbent materials promptly and dispose of properly. Inspect onsite vehicles and equipment daily at startup for leaks, and repair immediately. Deep vehicles and equipment clean; do not allow excessive buildup of oil and grease. Segregate and recycle wastes, such as greases, used oil or oil filters, antifreeze, cleaning solutions, automotive batteries, hydraulic and transmission fluids. Provide secondary containment and covers for these materials if stored onsite. Train employees and subcontractors in proper maintenance and spill cleanup procedures. Drip pans or plastic sheeting should by placed under all vehicles and equipment placed on docks, barges, other structures over water bodies when the vehicle or equipment is planned to be idle for more than 1 hour. Properly dispose of used oils, fluids, lubricants, and spill cleanup materials. Properly dispose of or recycle used batteries. Do not place used oil in a dumpster or pour into a storm drain or water course. Properly dispose of used oils, fluids, lubricants, and spill cleanup materials. Don not bury tires. Repair leaks of fluids and oil immediately.

Spill prevention for fertilizers shall conform to the following practices: Fertilizer's used will be applied only in the minimum amounts recommended by the manufacturer. Once applied, fertilizer will be worked into the soil to limit exposure to storm water. The contents of any partially used bags of fertilizer will be transferred to a sealable plastic bin to avoid spills.

Spill prevention for paint and solvents shall conform to the following practices: All containers will be tightly sealed and stored when not required for use. EXCESS PAINT WILL NOT BE DISCHARGED TO THE STORM SEWER SYSTEM but will be properly disposed of according to manufacturers' instructions or State or local regulations.

Spill prevention and cleanup shall conform to IDEM form 327 IAC 2-6 and the Indianapolis Fire Department (317-327-6041), Marion County Soil & Water office (317-786-1776) and IDEM Spill Response Center (888-233-7745) shall be contacted in the case of a material spill occurring.

(B14) MONITORING AND MAINTENANCE GUIDELINES

EROSION CONTROL SCHEDULE

EROSION CONTROL MEASURE	* MAINTENANCE	INSTALLATION SEQUENCE
STONE ENTRANCE	AS NEEDED	PRIOR TO CLEARING AND GRADING
INLET PROTECTION	WEEKLY, AFTER STORM EVENTS AND AS NEEDED	PRIOR TO CLEARING AND GRADING
SILT FENCE	WEEKLY, AFTER STORM EVENTS AND AS NEEDED	PRIOR TO CLEARING AND GRADING
TREE PROTECTION	WEEKLY, AFTER STORM EVENTS AND AS NEEDED	PRIOR TO CLEARING AND GRADING
TEMPORARY DIVERSIONS	WEEKLY, AFTER STORM EVENTS AND AS NEEDED	ALONG WITH ROUGH GRADING
RIP-RAP HORSESHOE	WEEKLY, AFTER STORM EVENTS AND AS NEEDED	IMMEDIATELY AFTER DETENTION BASIN CONSTRUCTION
PERMANENT SEEDING	WATER AS NEEDED	AFTER FINISH GRADING
EROSION CONTROL MATTING	WEEKLY, AFTER STORM EVENTS AND AS NEEDED	AFTER FINISH GRADING
SEED, SOD & LANDSCAPE AROUND BUILDING ADDITION	WATER AS NEEDED	AFTER FINISHED GRADING AROUND BUILDING ADDITION
REMOVAL OF INLET PROTECTION	N/A	AFTER NOT IS APPROVED
REMOVAL OF SILT FENCE	N/A	AFTER NOT IS APPROVED
REMOVAL OF RIP RAP HORSESHOE	N/A	AFTER NOT IS APPROVED

* – SEE CHART FOR MAINTENANCE REQUIREMENTS

EROSION CONTROL MEASURES MAINTENANCE REQUIREMENTS

SILT FENCE MAINTENANCE REQUIREMENTS

1. INSPECT THE SILT FENCE PERIODICALLY AND AFTER EACH STORM EVENT.
2. IF FENCE FABRIC TEARS, STARTS TO DECOMPOSE, OR IN ANY WAY BECOMES INEFFECTIVE, REPLACE THE AFFECTED PORTION IMMEDIATELY.
3. REMOVE DEPOSITED SEDIMENT WHEN IT REACHES HALF THE HEIGHT OF THE FENCE AT ITS LOWEST POINT OR IS CAUSING THE FABRIC TO BULGE.
4. TAKE CARE TO AVOID UNDERMINING THE FENCE DURING CLEAN OUT.
5. AFTER THE CONTRIBUTING DRAINAGE AREA HAS BEEN STABILIZED, REMOVE THE FENCE AND SEDIMENT DEPOSITS, BRING THE DISTURBED AREA TO GRADE, AND STABILIZE.

TEMPORARY SEDIMENT TRAP MAINTENANCE REQUIREMENTS

1. INSPECT TEMPORARY SEDIMENT TRAPS AFTER EACH STORM EVENT AND IMMEDIATELY REPAIR ANY EROSION AND PIPING HOLES.
2. REMOVE SEDIMENT WHEN IT HAS ACCUMULATED TO ONE-HALF THE DESIGN DEPTH.
3. REPLACE SPILLWAY GRAVEL FACING IF CLOGGED.
4. INSPECT VEGETATION, AND RE-SEED IF NECESSARY.
5. CHECK THE SPILLWAY DEPTH PERIODICALLY TO ENSURE A MINIMUM OF 1.5 FT. DEPTH FROM THE LOWEST POINT OF THE SETTLED EMBANKMENT TO HIGHEST POINT OF THE SPILLWAY CREST, AND FILL ANY LOW AREAS TO MAINTAIN DESIGN ELEVATION.
6. PROMPTLY REPLACE ANY DISPLACED RIPRAP, BEING CAREFUL THAT NO STONES IN THE SPILLWAY ARE ABOVE DESIGN GRADE.
7. AFTER ALL DISTURBED AREAS HAVE BEEN STABILIZED, REMOVE THE STRUCTURE AND SEDIMENT, SMOOTH THE SITE TO BLEND WITH ADJOINING AREAS, AND STABILIZE.

SANDBAG CURB INLET SEDIMENT BARRIER MAINTENANCE REQUIREMENTS

1. INSPECT FREQUENTLY FOR DAMAGE BY VEHICULAR TRAFFIC, AND REPAIR IF NECESSARY.
2. INSPECT AFTER EACH STORM EVENT.
3. REMOVE SEDIMENT, WITHOUT FLUSHING, WHEN IT REACHES HALF THE HEIGHT OF THE BARRIER.
4. DEPOSIT REMOVED SEDIMENT WHERE IT WILL NOT ENTER STORM DRAINS.

BLOCK AND GRAVEL CURB INLET PROTECTION MAINTENANCE REQUIREMENTS

1. AFTER EACH STORM EVENT, REMOVE THE SEDIMENT AND REPLACE THE GRAVEL; REPLACE THE GEOTEXTILE FABRIC, IF USED.
2. PERIODICALLY REMOVE SEDIMENT AND TRACKED-ON SOIL FROM THE STREET, WITHOUT FLUSHING, TO REDUCE THE SEDIMENT LOAD ON THE CURB INLET PROTECTION.
3. INSPECT PERIODICALLY FOR DAMAGE AND REPAIR; KEEP GRATES FREE OF DEBRIS.
4. WHEN THE CONTRIBUTING DRAINAGE AREA HAS BEEN STABILIZED, REMOVE THE GRAVEL, WIRE MESH, GEOTEXTILE FABRIC, AND ANY SEDIMENT, AND DISPOSE OF THEM PROPERLY.

EROSION CONTROL BLANKET (SURFACE APPLIED) MAINTENANCE REQUIREMENTS

1. DURING VEGETATIVE ESTABLISHMENT, INSPECT AFTER STORM EVENTS FOR ANY EROSION BELOW THE BLANKET.
2. IF ANY AREA SHOWS EROSION, PULL BACK THAT PORTION OF THE BLANKET COVERING IT, ADD SOIL, RE-SEED THE AREA, AND RE-LAY AND STAPLE THE BLANKET.
3. AFTER VEGETATIVE ESTABLISHMENT, CHECK THE TREATED AREA PERIODICALLY.

TEMPORARY GRAVEL CONSTRUCTION ENTRANCE MAINTENANCE REQUIREMENTS

1. INSPECT ENTRANCE PAD AND SEDIMENT DISPOSAL AREA WEEKLY AND AFTER STORM EVENTS OR HEAVY USE.
2. RESHAPE PAD AS NEEDED FOR DRAINAGE AND RUNOFF CONTROL.
3. TOPDRESS WITH CLEAN STONE AS NEEDED.
4. IMMEDIATELY REMOVE MUD AND SEDIMENT TRACKED OR WASHED ONTO PUBLIC ROADS BY BRUSHING OR SWEEPING. FLUSHING SHOULD ONLY BE USED IF THE WATER IS CONVEYED INTO A SEDIMENT TRAP OR BASIN.
5. REPAIR ANY BROKEN ROAD PAVEMENT IMMEDIATELY.

POST-CONSTRUCTION WATER QUALITY REQUIREMENTS

(C1) POTENTIAL LAND USE POLLUTANTS

Potential pollutant sources that may appear at the site due to proposed land use activities, but are not limited to vehicles, exposed soil and trash. Potential pollutants include, but are not limited to oil, grease, diesel fuel, gasoline, anti-freeze, auto soap and fertilizer.

(C2) STORMWATER QUALITY IMPLEMENTATION

Final stormwater quality measures will be implemented during and after each phase of building construction and grading is finalized. Sequences of stormwater quality items are described in the erosion control schedule in Section B2.

(C3) STORMWATER QUALITY DESCRIPTION

The use of a Aquaswirl AS5 water quality unit will be the primary BMP to remove sediment from the post-construction run-off. Permanent seeding and the keeping vegetative cover in the flowline of the detention basin will also help in the reduction of pollutants in stormwater run-off.

(C4) STORMWATER QUALITY SPECIFICATIONS

The location of each post-construction stormwater quality measure can be seen on sheet C103. The details and specifications of each measure is on sheet C802.

(C5) MAINTENANCE GUIDELINES

Any debris in the parking areas should be picked up and placed in the trash receptacle. The parking area shall be kept clean and be swept every 3 months.

Aquaswird AS5
Inspect the unit every six months and clean the system as needed. Inspect and clean the system once annually regardless of whether it has reached its sediment or floatable pollutant storage capacity. Call a local vactor company to remove sediments, oil, and other floatable pollutants with a vactor. Dispose of all waste in accordance with federal, state and local requirements. Water and sediment from cleaning procedures should NOT be dumped into a sanitary sewer.

ROGER WARD ENGINEERING INCORPORATED
CIVIL ENGINEERS - LAND PLANNERS - DEVELOPMENT CONSULTANTS
7474 NOBEL ROAD
INDIANAPOLIS, INDIANA 46278
(317) 251-1738 (FAX) 251-1923
www.rw-engineering.com

EROSION CONTROL SPECIFICATIONS

DRAWN BY: DBS
DATE: 01/26/2015
FILE NAME: TMP/001/DWG/C106
ADD:

REVISIONS:
1.- 03/19/15 DBS REVISED PER DLZ COMMENTS
2.- 04/03/15 DBS REVISED PER DLZ COMMENTS
4.-

THREE MILE PROPETIES, INC.
PROPOSED C-STORE & RETAIL SHOPS
8562 LAFAYETTE ROAD
INDIANAPOLIS, INDIANA

ROGER C. WARD REGISTERED No. PE19800489 STATE OF INDIANA PROFESSIONAL ENGINEER

BY:

DATE: mm-dd-2015

SHEET C106 OF X

JOB#: TMP.001

The Official Thouroughfare Plan for Marion County lists this section of W. 86th Street as having an existing 40 foot right of way, and a proposed right of way of 140 feet.

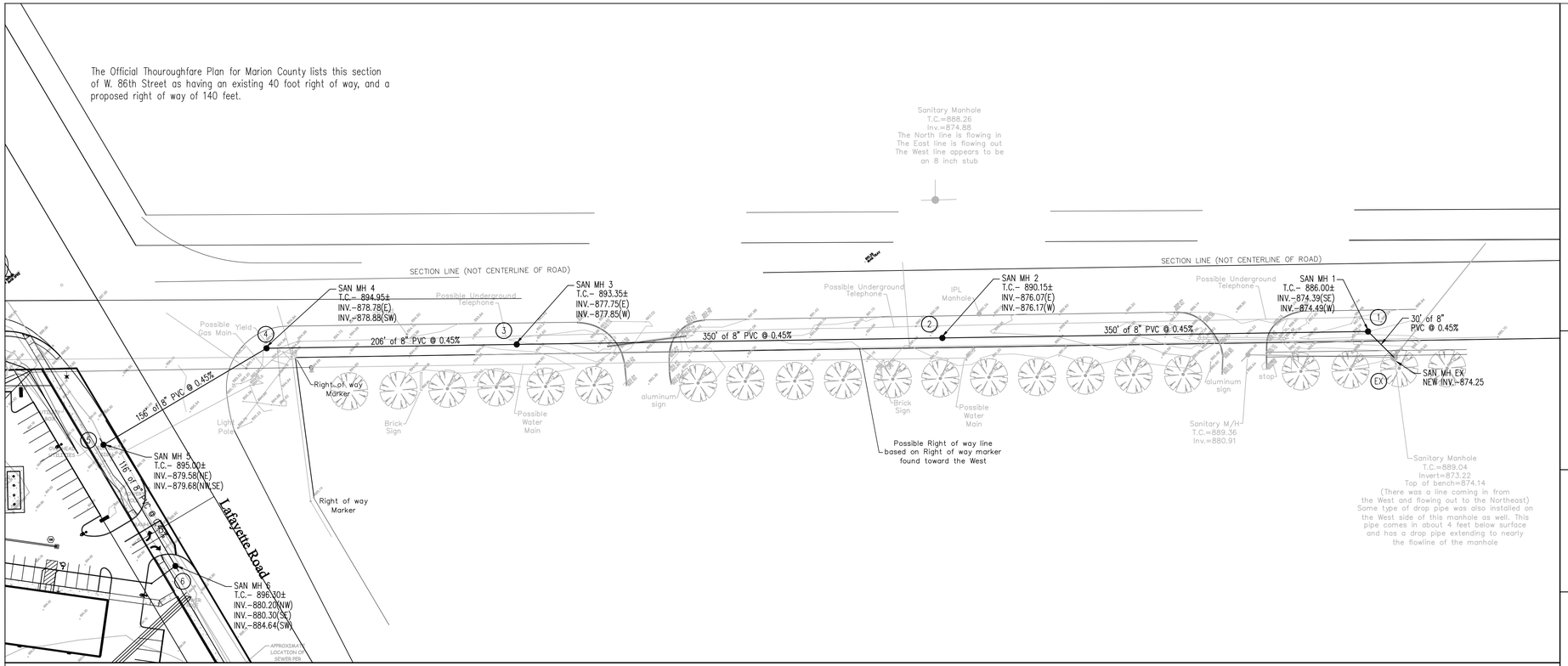

SANITARY PROFILE

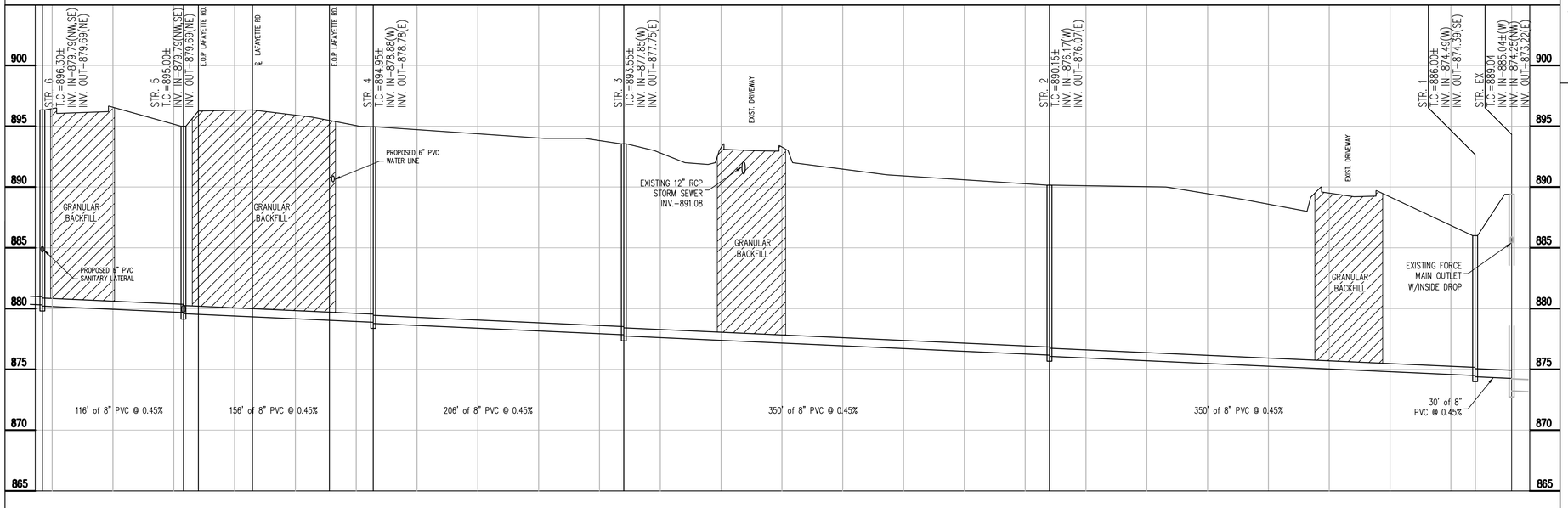

SCALE: HORZ.: 1"=50'
VERT.: 1"=5'

ASSUMED NORTH
SCALE: 1"= 20 '

Indiana 811
Know what's below.
Call before you dig.

BENCHMARK NOTE

PIKE 91A

General coordinates: 8562N & 8500N
Sec. 21-17-2: Run in from P 91 MCS, in the NE corner of the porch at 8562 N. Lafayette Road, 0.5' W of the NE corner of the porch, 200' W of the centerline of US 52 and 135' S of W. 86th Street.

ELEV. 898.36

FLOOD NOTE

THIS SITE LIES WITHIN SPECIAL FLOOD HAZARD ZONES "A" & "X" AS SCALED FROM THE FLOOD INSURANCE RATE MAPS (FIRM) FOR CITY OF INDIANAPOLIS, INDIANA, COMMUNITY NUMBER 18097C, PANEL NUMBERS 0015E & 0020E, DATED JANUARY 5, 2001.

PER IDNR E-FARA GN-30839-0 DATED 1/21/15, THE BASE FLOOD ELEVATION FOR THIS SITE IS 838.90' (NAVD 1988 DATUM).

THE MINIMUM FLOOD PROTECTION GRADE IS 842.00'.

LEGEND

- EXISTING SANITARY SEWER & MANHOLE
- EXISTING STORM SEWER; INLET & M.H.
- EXISTING CONTOUR LINE
- PROPOSED CONTOUR LINE
- PROPOSED SANITARY SEWER; MANHOLE
- (1) PROPOSED SANITARY STRUCTURE NUMBER

GENERAL NOTES

1. IT SHALL BE THE RESPONSIBILITY OF EACH SUBCONTRACTOR TO VERIFY ALL EXISTING UTILITIES AND CONDITIONS PERTAINING TO THEIR PHASE OF WORK. IT SHALL ALSO BE THE SUBCONTRACTOR'S RESPONSIBILITY TO CONTACT THE OWNERS OF THE VARIOUS UTILITIES FOR PROPER STAKE LOCATION OF EACH UTILITY BEFORE WORK IS STARTED. THE SUBCONTRACTOR SHALL NOTIFY IN WRITING THE OWNER AND THE ENGINEER OF ANY CHANGES, OMISSIONS, OR ERRORS FOUND ON THESE PLANS OR IN THE FIELD BEFORE WORK IS STARTED OR RESUMED.

2. STANDARD SPECIFICATIONS FOR THE LOCAL GOVERNING AGENCY SHALL APPLY FOR ALL SANITARY SEWERS, STORM SEWERS, AND WATER MAINS.

3. ALL DIMENSIONS ARE TO EDGE OF PAVEMENT OR FACE OF CURB, UNLESS NOTED OTHERWISE.

4. ANY PART OF THE SANITARY OR STORM SEWER TRENCHES RUNNING UNDER OR WITHIN 5' OF PAVED AREAS TO BE BACKFILLED WITH GRANULAR MATERIAL.

5. ALL 6" PVC SANITARY SEWER LATERALS SHALL BE INSTALLED AT A MINIMUM SLOPE OF 2.08%.

6. ALL LATERALS ARE REQUIRED TO HAVE TRACER WIRE INSTALLED ON THE TOP OF THE PIPE FROM THE SEWER MAIN TO THE CLEANOUT.

7. MANHOLE FLOW CHANNELS SHALL BE FACTORY FORMED.

8. MANHOLE SECTIONS SHALL HAVE 6" BANDS OF BUTYL RUBBER AT EACH SECTION JOINT.

9. CONNECTION TO EXISTING SEWER SHALL REMAIN MECHANICALLY PLUGGED UNTIL TIME OF TESTING. PLUG REMOVAL SHALL BE WITNESSED BY UTILITY INSPECTOR.

10. ALL MANHOLE CONNECTIONS (NEW AND EXISTING) MUST BE MADE WITH A GASKETED WATERTIGHT CONNECTION PER 327 IAC 3-6-16 (b).

ROGER WARD ENGINEERING INCORPORATED
CIVIL ENGINEERS - LAND PLANNERS - DEVELOPMENT CONSULTANTS
7474 MOBIL ROAD
INDIANAPOLIS, INDIANA 46278
(317) 251-1738 (FAX) 251-1923
www.rw-engineering.com

SANITARY SEWER PLAN/PROFILE

DRAWN BY: DBS
DATE: 01/26/2015
FILE NAME: PAR/03/DWK/0401
AREA:

REVISIONS:
1.- 03/19/15 DBS REVISED PER DLZ COMMENTS
2.- 04/03/15 DBS REVISED PER DLZ COMMENTS

THREE MILE PROPETIES, INC.
PROPOSED C-STORE
& RETAIL SHOPS
8562 LAFAYETTE ROAD
INDIANAPOLIS, INDIANA

ROGER C. WARD JR.
REGISTERED
No. PE19800489
STATE OF INDIANA
PROFESSIONAL ENGINEER

BY:

DATE: mm-dd-2015

SHEET
C401
OF
X

JOB#: TMP.001

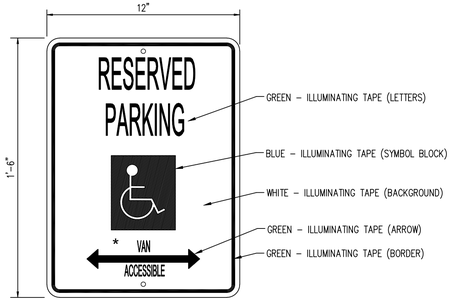

* "VAN ACCESSIBLE" TO BE NOTED FOR SPACES DESIGNATED FOR THAT USE.

HANDICAP PARKING SIGN DETAIL

NO SCALE

SUBGRADE UNDER ALL CURB, SIDEWALK, AND DRIVES SHALL BE COMPACTED IN ACCORDANCE WITH SECTION 207.02 OF THE STANDARD SPECIFICATIONS.

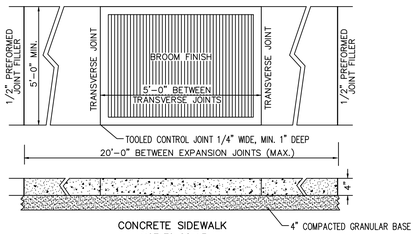

SIDEWALK DETAIL

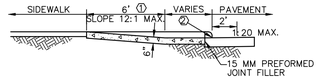

SECTION A-A (REVERSED FOR TYPE H)

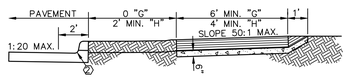

SECTION B-B (REVERSED FOR TYPE H)

① DIMENSIONS BASED ON 6" CURB HEIGHT
② BOTTOM EDGE OF CURB RAMP SHALL BE ADJACENT EDGE OF PAVEMENT/GUTTER

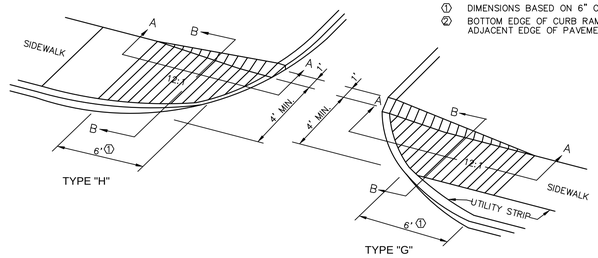

ACCESSIBLE CURB RAMP

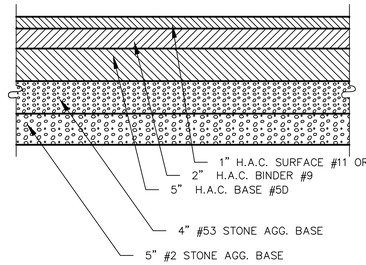

● PREPARED SUBGRADE PER INDOT No. 207

TYPICAL PAVEMENT SECTION

(WITHIN RIGHT OF WAY ONLY)

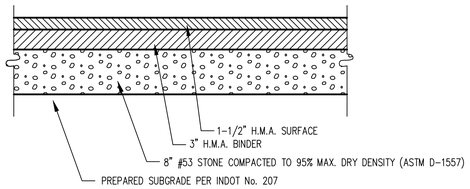

TYPICAL PAVEMENT SECTION

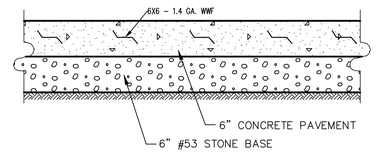

● PREPARED SUBGRADE PER INDOT No. 207

CONCRETE PAVEMENT SECTION

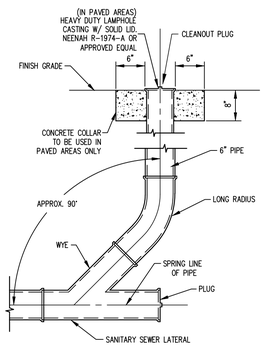

TYPICAL CLEANOUT DETAIL WITH PLUG

NO SCALE

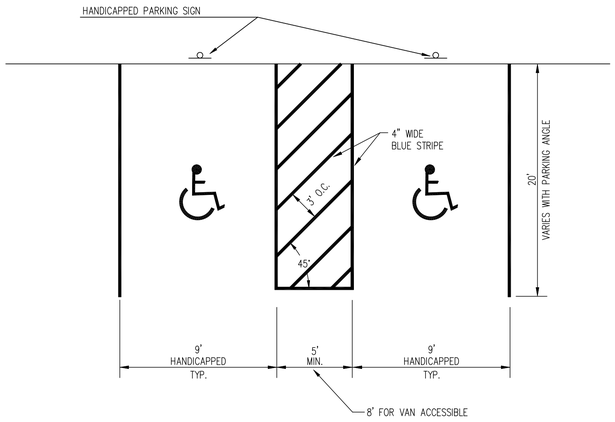

HANDICAP PARKING STALLS

NO SCALE

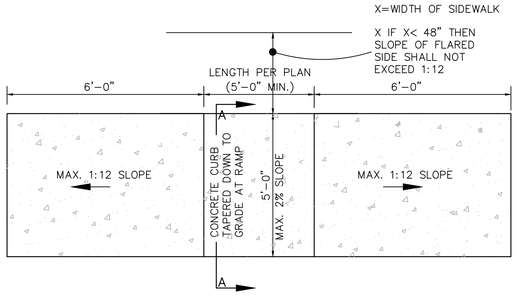

PLAN VIEW

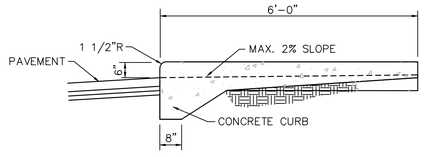

SECTION A-A

WHEELCHAIR RAMP DETAIL

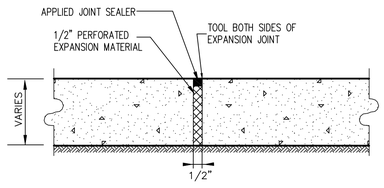

EXPANSION JOINT DETAIL

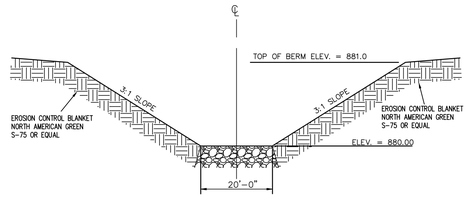

EMERGENCY SPILLWAY CROSS SECTION

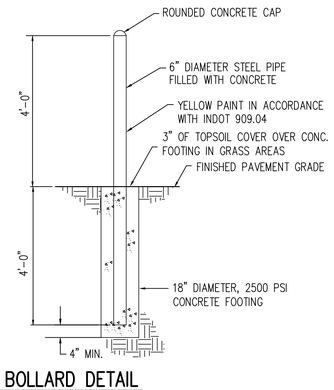

BOLLARD DETAIL

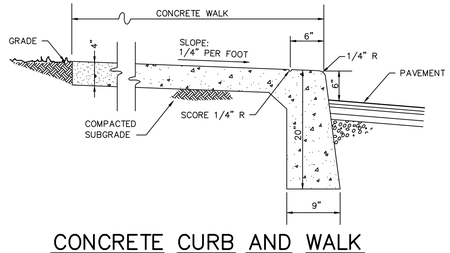

CONCRETE CURB AND WALK

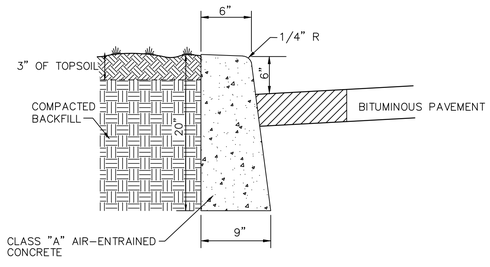

STRAIGHT CONCRETE CURB

ROGER WARD ENGINEERING INCORPORATED
CIVIL ENGINEERS - LAND PLANNERS - DEVELOPMENT CONSULTANTS
7474 MOEL ROAD
INDIANAPOLIS, INDIANA 46278
(317) 251-1738 (FAX) 251-1923
www.rw-engineering.com

GENERAL DETAILS

DRAWN BY: DBS
DATE: 01/26/2015
FILE NAME: TMP/001/DWG/C801
ADD:

REVISIONS:
1- 02/19/15 DBS REVISED PER DLZ COMMENTS
2- 04/03/15 DBS REVISED PER DLZ COMMENTS
4-

THREE MILE PROPETIES, INC.
PROPOSED C-STORE
& RETAIL SHOPS
8562 LAFAYETTE ROAD
INDIANAPOLIS, INDIANA

ROGER C. WARD JR. REGISTERED No. PE19800489 STATE OF INDIANA PROFESSIONAL ENGINEER

BY:

DATE: mm-dd-2015

SHEET
C801
OF
X

JOB#: TMP.001

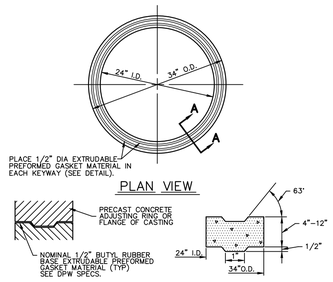

ADJUSTING RING DETAIL

(FIGURE 300.08)

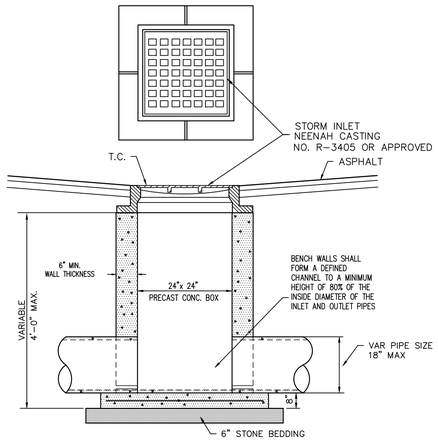

TYPICAL PAVED AREA INLET

STRUCTURES 108, 109, 110, 111, 112

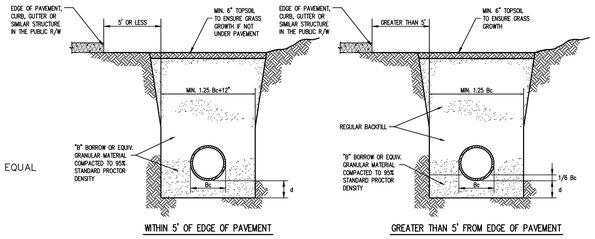

DEPTH OF BEDDING MATERIAL BELOW PIPE

D	(d) MIN.
27" & SMALLER	3"
30" TO 60"	4"
66" & LARGER	6"

NOTE:
ALL BEDDING & INITIAL BACKFILL SHALL BE INSTALLED IN 4" TO 12" BALANCED LIFTS

A MINIMUM 9" OF CLEARANCE SHALL BE PROVIDED ON EACH SIDE OF THE INSTALLED PIPE

LEGEND
Bc = OUTSIDE DIAMETER
D = INSIDE DIAMETER
d = DEPTH OF BEDDING MATERIAL BELOW PIPE

TRENCH DETAIL

REINFORCED CONCRETE PIPE (RCP)

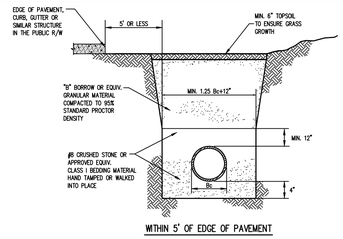

NO SCALE

NOTE:
ALL BEDDING & INITIAL BACKFILL SHALL BE INSTALLED IN 6" TO 12" BALANCED LIFTS

A MINIMUM 9" OF CLEARANCE SHALL BE PROVIDED ON EACH SIDE OF THE INSTALLED PIPE

LEGEND
Bc = OUTSIDE DIAMETER
D = INSIDE DIAMETER
d = DEPTH OF BEDDING MATERIAL BELOW PIPE

TRENCH DETAIL

PLASTIC PIPE (PVC & HDPE)
D.C.A.M. # 501-05

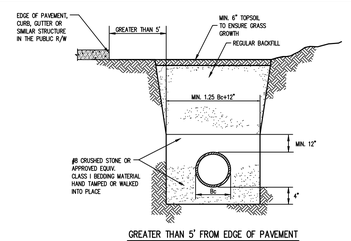

NO SCALE

NOTE:
ALL BEDDING & INITIAL BACKFILL SHALL BE INSTALLED IN 6" TO 12" BALANCED LIFTS

A MINIMUM 9" OF CLEARANCE SHALL BE PROVIDED ON EACH SIDE OF THE INSTALLED PIPE

LEGEND
Bc = OUTSIDE DIAMETER
D = INSIDE DIAMETER
d = DEPTH OF BEDDING MATERIAL BELOW PIPE

TRENCH DETAIL

PLASTIC PIPE (PVC & HDPE)
D.C.A.M. # 501-06

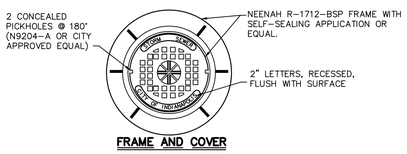

FRAME AND COVER

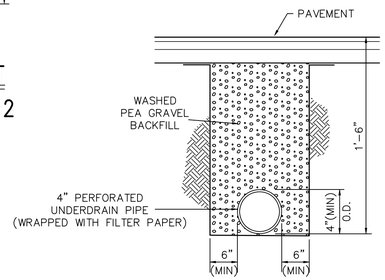

PIPE UNDERDRAIN

IN PARKING LOTS

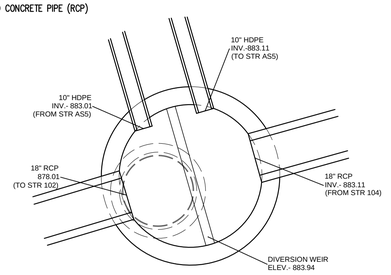

STR #103 – DIVERSION STRUCTURE

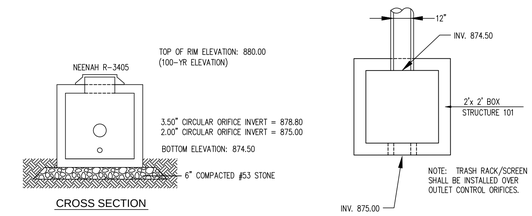

STR #101 – OUTLET CONTROL STRUCTURE

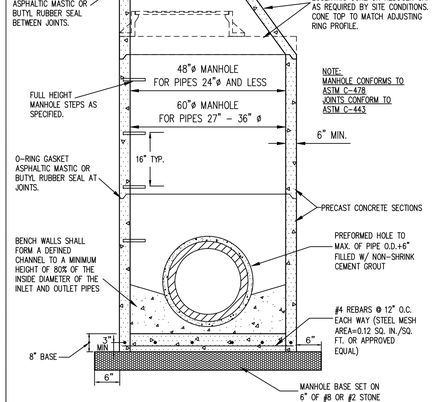

MANHOLE SIZE	PIPE	PIPE TURNS
96"	48"	GREATER THAN 45° TO 90°
96"	54"-66"	UP TO 60°
84"	42"	GREATER THAN 45° TO 90°
84"	48"	UP TO 45°
72"	42"-48"	UP TO 45°
72"	33"-36"	GREATER THAN 45° TO 90°
60"	27"-36"	STRAIGHT THRU
60"	24"-33"	GREATER THAN 45° TO 90°
48"	12"-24"	STRAIGHT THRU

STORM SEWER MANHOLE

NOTE:
MANHOLE STEPS SHALL BE MADE FROM A STEEL REINFORCING ROD ENCAPSULATED IN A COPOLYMER POLYPROPYLENE RESIN. THE MANHOLE STEPS SHALL EQUAL OR EXCEED OSHA REQUIREMENTS. MANHOLE STEPS, MANUFACTURED BY M.A. INDUSTRIES, INC., PS-1-PF, CLAY & BAILEY MFG. CO., OR EQUAL ARE ACCEPTABLE.

STRUCTUREs 103, 107

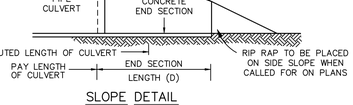

SLOPE DETAIL

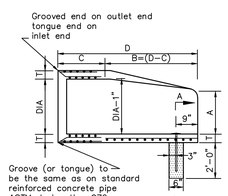

LONGITUDINAL SECTION

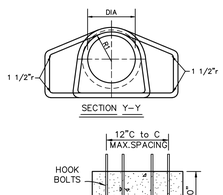

DIMENSIONS OF CONCRETE END SECTIONS FOR ROUND PIPE									
DIA	T (MIN)	A *	C *	D *	E *	K	R_1	R_2	APPROX. WEIGHT
12"	2"	5"	4'-3"	6'-2"	2'-0"	1.3	10 1/8"	9"	800
15"	2 1/4"	7"	4'-0"	6'-3"	2'-6"	1.5	12 1/2"	11"	1,100
18"	2 1/2"	11"	4'-1"	6'-2"	3'-0"	1.8	15 1/2"	12"	1,300
21"	2 3/4"	11"	3'-6"	6'-3"	3'-6"	2.1	16 1/8"	13"	1,500
24"	3"	1'-0"	2'-8"	6'-3"	4'-0"	2.3	16 3/16"	14"	1,800
27"	3 1/4"	1'-1"	2'-5"	6'-3"	4'-6"	2.6	18 1/2"	14 1/2"	2,100
30"	3 1/2"	1'-2"	1'-10"	6'-3"	5'-0"	2.9	18 3/16"	15"	2,400
33"	3 3/4"	1'-3"	3'-6"	8'-3"	5'-6"	3.1	18 1/2"	17 1/2"	4,100
36"	4"	1'-5"	3'-1"	8'-3"	6'-0"	3.4	23 3/4"	20"	4,200
48"	5"	2'-0"	2'-2"	8'-2"	7'-0"		28 1/8"	22"	6,500

* TOLERANCE +/- 1"

PRECAST CONCRETE END SECTION

STRUCTURES 100, 102, 114, 115

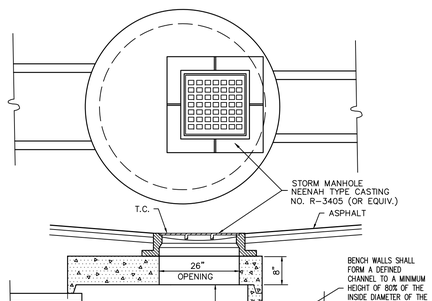

DIMENSIONS (INCHES)			
A (MAX)	B ENT/EXIT @ 0-45 DEG <	B ENT/EXIT @ 46-90 DEG <	C (MIN)
12	48	48	18
15	48	48	21
18	48	48	25
21	48	48	28
24	48	60	31
27	60	60	34
30	60	60	38
33	60	72	41
36	60	72	44
42	60	72	50

SPECIAL PAVED AREA INLET

STRUCTURES 104, 105, 106

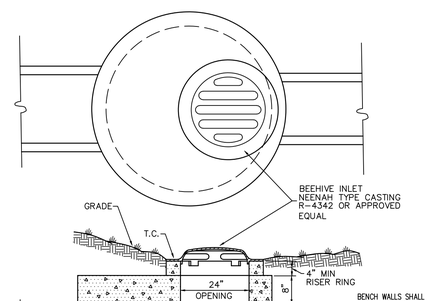

DIMENSIONS (INCHES)			
A (MAX)	B ENT/EXIT @ 0-45 DEG <	B ENT/EXIT @ 46-90 DEG <	C (MIN)
12	48	48	18
15	48	48	21
18	48	48	25
21	48	48	28
24	48	60	31
27	60	60	34
30	60	60	38
33	60	72	41
36	60	72	44
42	60	72	50

BEEHIVE INLET DETAIL

STRUCTURE 113

ROGER WARD ENGINEERING INCORPORATED
CIVIL ENGINEERS - LAND PLANNERS - DEVELOPMENT CONSULTANTS
7474 MOEL ROAD
INDIANAPOLIS, INDIANA 46278
(317) 251-1738 (FAX) 251-1923
www.rw-engineering.com

GENERAL DETAILS

DRAWN BY: DBS
DATE: 01/26/2015
FILE NAME: TMP/001/DWG/802
ADD:

REVISIONS:
1- 02/19/15 DBS REVISED PER DLZ COMMENTS
2- 04/03/15 DBS REVISED PER DLZ COMMENTS
3-
4-

THREE MILE PROPETIES, INC.
PROPOSED C-STORE & RETAIL SHOPS
8562 LAFAYETTE ROAD
INDIANAPOLIS, INDIANA

ROGER C. WARD REGISTERED No. PE19800489 STATE OF INDIANA PROFESSIONAL ENGINEER

BY:

DATE: mm-dd-2015

SHEET C802 OF X

JOB#: TMP.001

EARTHWORK

1. SCOPE OF WORK

A. Extent: The work required under this section consists of all excavating, filling, rough grading and related items necessary to complete the work indicated on the drawings and described in the specifications. The Contractor shall notify in writing the owners and the Engineer of any changes, errors or omissions found on the plans or in the field before work is started or resumed.

1. In general, the items of work to be performed under this section shall include: clearing and grubbing, removal of trees and stumps (where required), protection of trees to remain, stripping and storage of topsoil, fill compaction and rough grading of entire site.

2. Excavated material that is suitable may be used for fills. All unsuitable material and all surplus excavated material not required shall be removed from the site. The location of dump and length of haul shall be the Contractor's responsibility.

3. Provide and place any additional fill material from off the site as may be necessary to produce the grades required. Fill obtained from off site shall be of kind and quality as specified for fills herein and the source approved by the Owner.

4. The Contractor shall accept the site as he finds it and shall remove all trash, rubbish and debris from the site prior to starting excavation.

B. Work not included: The following items of related work are specified and included in other sections of these specifications:

1. Excavation, grading and backfilling for utility lines
2. Storm drainage systems
3. Sanitary sewer systems
4. Streets and paving
5. Water supply system

2. BENCH MARKS

Maintain carefully all bench marks, monuments and other other reference points; if disturbed or destroyed, Contractor shall contact engineer. Replacement shall be at Contractor's expense.

3. REMOVAL OF TREES

A. Remove all trees and stumps from area to be occupied by road and surfaced areas. Removal of trees outside these areas shall only be done as noted on drawings or approved by the Owner.

B. All brush, stumps, wood and other refuse from the trees shall be removed to disposal areas off of the site. Disposal by burning shall not be permitted unless proper permits are obtained (where applicable). The location of on-site bury pits shall be approved by the owner and the Engineer if permitted.

4. PROTECTION OF TREES

A. General Protection: The Contractor shall be responsible for the protection of tops, trunks and roots of existing trees on the project site that are to remain. Existing trees subject to construction damage shall be boxed, fenced or otherwise protected before any work is started; do not stockpile within branch spread. Remove interfering branches without injury to trunks and cover scars with tree paint.

5. HANDLING OF TOPSOIL

A. Remove all organic material from the areas to be occupied by buildings, roads, walks and parking areas. Pile and store topsoil at a location where it will not interfere with construction operations. Topsoil shall be reasonably free from subsoil, debris, weeds, grass, stones, etc..

B. After completion of site grading and subsurface utility installation, top soil shall be replaced in areas designated on the erosion control plan for seeding and/or sod. Any remaining topsoil shall be used for finished grading around structures and landscaping areas.

6. DISPOSITION OF UTILITIES:

A. Rules and regulations governing the respective utilities shall be observed in executing all work under this section.

B. If active utilities are encountered but not shown shown on the drawings, the Engineer shall be advised before work is continued.

C. Inactive and abandoned utilities encountered in excavating and grading operations shall be reported to the Engineer. They shall be removed, plugged or capped as directed by the Utility Company or the Engineer.

D. It shall be the responsibility of each contractor to verify all existing utilities and conditions pertaining to his phase of the work. It shall also be the contractors responsibility to contact the owners of the various utilities before work is started.

7. SITE GRADING:

A. Grades: Contractor shall perform all cutting, filling, compacting of fills and rough grading required to bring entire project area to grade as shown on the drawings.

B. Rough Grading: the tolerance for paved areas shall not exceed 0.10 feet plus or minus above the established subgrade. All other areas shall not exceed 0.10 feet plus or minus the established grade. All banks and other breaks in grade shall be rounded at top and bottom.

C. Compaction Requirements:

1. All areas supporting footings and paved areas shall be compacted to at least 95% standard proctor density.

2. All fill below building slab, adjacent to foundations and over foundations shall be compacted to 93% standard proctor density.

8. EARTH WORK BALANCE

A. The Contractor shall confirm all earthwork quantities prior to start of construction. If an excess or shortage of earth is encountered, the Contractor shall confirm with the Owner and Engineer the requirements for stockpiling, removal or importing of earth.

B. Minor adjustments to the grades may be required to earthwork balances when minor excess material or shortages are encountered. It is recognized by the parties hereto that the calculations of the the Engineer in determining earthwork quantities shall be accomplished in accordance with the American Society of Civil Engineers Standards for such calculations. Further, that these calculations are subject to the interpretations of soil borings as the physical limits of the various soil types, the allowable variation in finish grade and compaction permitted the contractor, and that all of these parameters may cause either an excess or shortage of actual earthwork materials to complete the project. If such an actual minor excess or shortage of materials occurs, the contractor shall contact the Engineer to determine if adjustment can be made to correct the imbalance of earth.

9. TESTING

A. Contractor shall hire at Contractors expence an independent soil testing service to assure soil compaction with scope of testing to be approved by Engineer. Copies of test results shall be submitted to the Engineer.

SANITARY SEWER SYSTEMS

1. SCOPE OF WORK

A. The work under this section includes all sanitary sewers, manholes, cleanouts and related items including excavating and backfilling, necessary to complete the work shown in the drawings, starting five feet outside the building walls. The ends of sewers shall be tightly plugged or capped at the terminal points, adjacent to buildings, pending the connecting of all such lines to the building drain as specified in the plumbing and architectural drawings. One set of "approved" plans shall be on the job site at all times.

2. MATERIALS

A. Polyvinyl Chloride Pipe (PVC)

1. 8"-15" PVC pipe shall be SDR 35 and conform to ASTM D3034, with a minimum cell classification of 12454-B or 12454-C. Greater than 15" PVC pipe shall conform to ASTM F679, with a minimum cell classification of 12454-C.

2. All fittings and joints shall be compression type flexible gasketed joints, and manufactured and installed in accordance with the pipe manufacturer's specifications. No solvent cement joints shall be allowed. All fittings shall be heavy walled fittings.

3. Pipes shall have a minimum pipe stiffness of 46 psi when measured at 5% vertical ring deflection and tested in accordance with ASTM D 2412 and a minimum tensile strength 34.50 MPa.

B. Ductile Iron Pipe

1. Ductile Iron (DI) pipe must meet ASTM A-746 and ANSI/AWWA A21.51/C151 with exterior bituminous coating per ANSI/AWWA A21.51/C151 and ANSI/AWWA A21.10/C110. The interior surfaces of all pipe, fittings, and adapters shall be lined with factory applied Protecto 401 ceramic epoxy lining, or approved equal. Pipe must be marked per ASTM A 746.

2. Mechanical, push on or restrained joints shall be provided Flanged joints are not allowed for buried applications. Mechanical joints and accessories shall conform to AWWA C111/ANSI A21.11. The bolts and nuts shall be corrosion resistant high strength alloy steel. Push-on type joints shall conform to ANSI A21.11/AWWA C111. Fittings shall comply with ANSI Specification A21.10/AWWA C110. Restrained joints, shall be manufactured in accordance with pipe manufacturers' requirements. Locking rings, tabs, inserts, or gaskets with inset steel grips may all be used for gravity sanitary sewer applications. Fittings shall be standardized for the type of pipe and joint specified, and shall comply with ANSI A21.10/AWWA C110.

C. Manholes

1. Precast reinforced concrete manhole sections and steps and concrete adjusting rings shall conform to ASTM C-478 latest revision. Exterior of manhole shall be waterproofed with Bismatic material. Manhole sections shall not be installed until at least five days after having been cast unless permitted in writing by the Department.

2. Castings shall be of uniform quality, free from blow holes, porosity, hard spots, shrinkage distortion or other defects. They shall be smooth and well-cleaned by shot-blasting or by some other approved method. They shall be coated with asphalt paint which shall result in a smooth coating, tough and tenacious when cold, not tacky or brittle. They shall be gray iron meeting ASTM A-48 latest revision. Manhole covers for sanitary sewer shall be Neenah Type R-1077-A w/R-1712-B-SP Frame w/Self-Sealing application.

3. Joints – Manhole sections shall be joined with a rubber gasket per ASTM C 443, and 1/2" diameter butyl rubber rope sealant per ASTM C 990.

4. Manholes shall include steps. Manhole steps shall conform to the requirements of ASTM C 478 and be manufactured using steel rods encased in polypropylene plastic. Steps shall be factory installed when the manhole is manufactured.

5. Manholes shall be bedded on a granular foundation. The granular foundation shall be compacted with vibratory tamps.

6. Manholes adjusting rings shall only be concrete. They shall conform to ASTM C 478. Minimum thickness of concrete ring shall be four (4) inches.

7. Castings shall be Neenah R-1713-B-SP or East Jordan 1022"-1AGSMD. All castings shall have a machined bearing surface with Type F concealed pickholes. The words "Sanitary Sewer" and "City of Indianapolis" must be cast in recess letters two inches in height onto solid lid covers. Castings shall be manufactured in accordance with ASTM A 48 – Class 35B, and have a minimum tensile strength of 35,000 psi.

3. APPLICATION

A. Permits and Codes – The intent of this section of the specifications is that the contractor's bid on the work covered herein shall be based upon the drawings and specifications but that the work shall comply with all applicable codes and regulations as amended by any waivers. Contractor shall furnish all bonds necessary to get permits for cuts and connections to existing sewers. The Contractor shall be responsible for obtaining or verifying all permits for all or portions of this project prior to starting construction. The Contractor shall notify the local or county inspector or utility superintendent 48 hours prior to commencement of sanitary construction.

B. Local Standards – The term "local standards" as used herein means the standards of design and construction of the respective municipal department or utility company.

C. Existing Improvements – Maintain in operating condition all active utilities, sewers and other drains encountered in the sewer installation. Repair to the satisfaction of the owner any damage to existing active improvements.

D. Workmanship – To conform to all local, state and national codes and to be approved by all local and state agencies having jurisdiction.

E. Trenching – Lay all pipe in open trenches, except when the local authority gives written permission for tunneling or jacking of pipe. Open the trench sufficiently ahead of pipe-laying to reveal any obstructions The width of the trench shall be the greater of the outside pipe diameter plus 16 inches or 12 inches plus 1.25 times outside diameter. Sheet and brace the trench as necessary to protect workmen and adjacent structures. All trenching to comply with Occupational Safety and Health Administration Standards. Open trenches shall be properly protected and/or barricaded when left unattended. Keep trenches free from water while construction is in progress. Under no circumstances shall pipe or appurtenances be laid in standing water. Conduct the discharge from trench dewatering to drains or natural drainage channels.

F. Special Supports – Whenever, in the opinion of the Engineer, the soil at or below the pipe grade is unsuitable for supporting sewers and appurtenances specified in this section, such special support, in addition to those shown or specified, shall be provided as the Engineer may direct, and the contract will be adjusted.

G. Backfilling – No. 8 crushed stone or No. 8 fractured faced aggregate shall be used. Bedding material shall be placed and compacted prior to laying the pipe. Haunching material shall be shovel sliced or otherwise carefully placed and "walked" or hand tamped to the springline to ensure compaction and complete filling of all voids. The initial backfill shall be added in six inch lifts "walked" in for compaction.

Material	Pipe size (in)	Depth Below Barrel, (in)	Depth Above Top of Pipe, (in)
Flexible	6 or less	4	4
Pipe	8 to 15	4	12
	18 and larger	8	12

Material	Pipe size (in)	Depth Below Barrel, (in)	Depth Above Top of Pipe, (in)
Rigid	8 to 16	4	6
Pipe	18 and larger	8	6

Final Backfill – For excavation within the right-of-ways, final backfill requirements shall be in accordance with the Department of Metropolitan Developments "Regulations For Cuts Within The Public Right-of-Way.

All other backfill requirements are as follows:
Within 5' of pavements, curbs, gutters, or similar structures trenches shall be backfilled with Structural "B-Borrow" for structural installations per INDOT Standard Specifications – Section 211. Backfill shall be compacted to achieve not less than 95% Standard Proctor Dry Density per INDOT Section 203.23.

Backfill shall be added and compacted in 12 in. lifts by mechanical tampers. Maximum compaction depth shall not exceed 6 ft.

Backfill outside of 5' of edge of pavement, curbs, gutter or similar structures shall be backfilled with clean fill material free of rocks larger than 6 in. in diameter, frozen lumps of soil, wood, or other extaneous material.

H. Flow Channels – The flow channels within manholes shall be an integral part of the precast base. The channels shall be shaped and formed for a clean transition with proper hydraulics to allow the smooth conveyance of flow through the manhole. The bench wall shall be formed to the crown of the inlet and outlet pipes to form a "U" shaped channel. The bench wall shall slope back from the crown at 1/2 inch per foot to the manhole wall. No brick, rock or sand fillers will be allowed.

I. Infiltration – The contractor shall furnish necessary equipment to test sewers for infiltration. Infiltration rates shall not exceed the Local Standards. All sanitary sewer lines upon completion will be required to pass a low pressure air test, unless otherwise directed by the City Engineer. Said test shall be conducted according to NCPI Standard Method, and shall be witnessed by an inspector authorized by the City Engineer. Infiltration under test shall not exceed 100 gallons per inch of inside diameter of sewer pipe per mile of sewer in 24 hours and is inclusive of all appurtenances within the section being tested such as manholes, house connections, etc. Any portions not passing said tests for acceptance shall be repaired or replaced, including re-excavation and backfill, at the Contractor's expense.

J. Flushing Sewers – Flush all sanitary sewers except building sewers with water to obtain full flow through each line. Remove all silt and trash from appurtenances just prior to acceptance of work.

K. Plastic Sewer Pipe Installation – Plastic sewer pipe shall be installed in accordance with ASTM D2321 per latest revision, and no plastic pipe shall exceed an 11 point mandrel test deflection of 5%. All sewer mains shall be lamped at the time the mandrel test is conducted. All mains shall be true to alignment and grade.

L. Storm Water Connections – No roof drains, footing drains and/or surface water drains may be connected to the sanitary sewer systems, including temporary connections during construction.

M. Waterline Crossing – Water and sewer line crossings and separations shall be in accordance with Ten States Standards and local and state codes. Waterlines and sanitary sewers shall maintain a minimum of 10 foot horizontal separation and a minimum 18 inches of clearance between pipes at crossings. Otherwise, sanitary sewer within 10 feet of waterlines shall be constructed of water works grade Ductile Iron Pipe with mechanical joints and fittings. One length of sewer pipe should be centered at the waterline crossing so that no joint is closer than 10 feet to the waterline.

N. Utilities – It shall be the responsibility of each contractor to verify all existing utilities and conditions pertaining to his phase of the work. It shall also be the contractors responsibility to contact the owners of the various utilities before work is started. The contractor shall notify in writing the owners and the engineer of any changes, errors or omissions found on these plans or in the field before work is started or resumed.

O. Service Laterals – Individual building service lines shall be 6 inches in diameter and of PVC material. Material requirements are in the table below.

Material	Designation	Classification	
PVC	ASTM D 3034	SDR35	CELL CLASS 12454 OR 12364
PVC	ASTM D 2241	SDR32.5	CELL CLASS 12454
PVC	ASTM D 2466	Schedule 40	CELL CLASS 12454
PVC	ASTM D 2467	Schedule 80	CELL CLASS 12454

Service lines shall be connected to the main sewer by a wye at locations generally shown within these plans. Service lines shall be extended to a distance of 5 feet beyond the right-of-way line and within 5'-8' of the existing ground surface. The ends shall be plugged and sealed with a water tight cap. Sewer service lines shall be marked with a 2"x4" painted green and extending from the lateral end to 3' above grade.

P. New Sanitary Sewer Main Construction – Contractor shall record length and dimension of each service line stub from nearest downstream manhole measure along the sanitary sewer main. The locations of manholes and service lines along with any other construction changes are to be incorporated on the original construction drawings as "as-built" locations and submitted to the Engineer as soon after completion of construction as possible, not to exceed 30 days.

Q. Gravity Sanitary Sewer Testing – All sanitary sewers 24 inches and less shall be air tested by means of a low pressure air test per Section 602.03 of the City of Indianapolis' Sanitary Sewer Standards. All sewers larger than 24 inches shall be joint tested per Section 602.04.

All sewers 24 inches and less shall be tested by means of a low-pressure air test to detect damaged piping and/or improper jointing. Testing shall be done per ASTM F 1417 flexible and semi-rigid pipe and ASTM C 924 for RCP.

All sewers greater than 24 inches shall be joint tested using air or water under low pressure. All joints shall be tested. Testing shall be per ASTM C 1103 and per City of Indianapolis' Sanitary Sewer Standards and Specifications.

R. Force Main Testing – All force mains for lift stations and common force mains in low pressure systems shall be tested for leakage by a Hydrostatic Leak Test per Section 603.03.

The hydrostatic leak test shall be done in accordance with AWWA standards based on force main material, in accordance with ASTM E 1003 and per Section 603.03.

S. Manhole Testing – All manholes shall be tested for infiltration by means of a negative air (vacuum) pressure test per Section 604.04 of the City of Indianapolis' Sanitary Specifications.

All manholes shall be tested for infiltration by means of a Negative Air (Vacuum) Pressure Test. Testing shall be done per ASTM C 1244.

All internal chimney seals shall be tested using a leakage test. Testing shall be performed per Section 604.05.

STORM SEWER SYSTEMS

1. SCOPE OF WORK

The work under this section includes all storm sewers, storm water inlets, and related items, including excavating and backfilling, necessary to complete the work shown on the drawings. All work and materials shall meet the local governing authorities specifications.

2. MATERIALS

A. Storm Sewers

1. Reinforced concrete sewer pipe shall conform to ASTM C-76 latest revision, with joints conforming to ASTM C-443 latest revision when storm pipe is continuously submerged in water.

2. Aluminized type 2 corrugated steel pipe shall be manufactured in accordance with AASHTO M36 (type I with 2 2/3" x 1/2" corrugations for 12" and 15" diameters; type IR with 3/4" x 3/4" x 7 1/2" corrugations for 18" diameter and larger). The pipe shall be formed from an aluminized steel type 2 coil that conforms to AASHTO M274. The minimum gage thickness of the pipe shall be as follows:

Diameter	Gage
12" – 36"	16
42" – 48"	14
54" – 84"	12

3. High density polyethylene pipe shall perform to AASHTO M252 and M294 Type S specifications, latest revision, and shall have material specifications conforming to ASTM D1248 or D3350, latest revision.

4. Polyvinyl Chloride (PVC) profile wall gravity flow storm sewer pipe shall be the integral wall bell and spigot type with elastomeric seal joints and smooth inner walls in accordance with AASHTO M304. A minimum Cell Class of 12454C or 12364C as set forth by ASTM D 1784 shall be required.

Smoothwall PVC pip shall be in accordance with ASTM F 679 or AASHTO M 278 for the specified sizes, and shall have a minimum Cell Class of 12364C for pipes meeting specification ASTM F 679, or 12454C for pipes meeting specification AASHTO M 278. Cell class properties shall be set forth by ASTM D 1784.

B. Manholes

1. Precast reinforced concrete manhole sections and steps shall conform to ASTM C-478 latest revision.

2. Casting shall be of uniform quality, free from blow holes, porosity, hard spots, shrinkage distortion or other defects. They shall be smooth and well cleaned by shot-blasting or by some other approved method. They shall be coated with asphalt paint which shall result in a smooth coating, tough and tenacious when cold, not tacky or brittle. They shall be gray iron meeting ASTM A-48 latest revision.

3. Joints – Manhole sections shall be jointed with rubber type gaskets. The rubber type gaskets shall meet ASTM C-443 latest revision. When manhole and storm pipe are continuously in water.

C. SUBDRAINS

1. Perforated plastic pipe subdrains shall conform to ASTM F-405, AASHTO M-252 (4" to 10" pipe).

3. APPLICATION

A. Permits and Codes – The intent of this section of the specifications is that the contractor's bid on the work covered herein shall be based upon the drawings and specifications but that the work shall comply with all applicable codes and regulations as amended by any waivers. Contractor shall furnish all bonds necessary to get permits for cuts and connections to existing sewers. Contractor shall notify the County Surveyor's Office a minimum of 72 hours prior to the commencement of storm sewer construction.

B. Local Standards – the term "Local Standards" as used herein means the standards of design and construction of the respective municipal department or utility company.

C. Existing Improvements – Maintain in operating condition all active utilities, sewers and other drains encountered in the sewer installation. Repair to the satisfaction of the owner any damage to existing active improvements.

D. Workmanship – To conform to all local, state and national codes and to be approved by all local and state agencies having jurisdiction.

E. Trenching – Lay all pipe in open trenches, except when the local authority gives written permission for tunneling. Open the trench sufficient ahead of pipe laying to reveal any obstructions. The width of the trench shall be the inside pipe diameter plus 24 inches for 12 inches above the pipe. Sheet and brace trench as necessary to protect workmen and adjacent structures. All trenching to comply with Occupational Safety and Health Administration Standards. Keep trenches free from water while construction is in progress. Under no circumstances lay pipe or appurtenances in standing water. Conduct the discharge from trench dewatering to drains or natural drainage channels.

F. Special Supports – Whenever in the opinion of the Engineer the soil at or below the pipe grade is unsuitable for supporting sewers and appurtenances specified in this section, such special support, in addition to those shown or specified, shall be provided as the Engineer may direct, and the contract will be adjusted.

G. Backfilling – for a depth of at least 12 inches above the top of the pipe, backfill with earth or granular material free from large stones, rock fragments, roots or sod. Tamp this backfill thoroughly, taking care not to disturb the pipe. For the remaining trench depth, backfill with earth or granular material containing stones or rocks not larger than 4 inches. Backfill under and within 5' of paved areas shall be granular material only and shall conform to local standards – thoroughly compacted by approved methods.

H. Manhole Inverts – Construct manhole flow channels of concrete sewer pipe or brick, smoothly finished and of semicircular section conforming to the inside diameter of the connecting sewers. Make changes in size or grade gradually and changes in direction by true curves. Provide such channels for all connecting sewers at each manhole.

I. Subdrains – All subdrains shall be of the size shown on the plans and shall be constructed to the grades shown. All drains constructed off-site as part of the outlet drain will be located as shown.

J. Utilities – It shall be the responsibility of each contractor to verify all existing utilities and conditions pertaining to his phase of the work. It shall also be the contractors responsibility to contact the owners of the various utilities before work is started. The contractor shall notify in writing the owners or the engineer of any changes, errors or omissions found on these plans or in the field before work is started or resumed.

STREETS AND PAVING

1. SCOPE OF WORK

A. The work required under this section includes all concrete and bituminous paving and related items necessary to complete the work indicated on drawings and described in the specifications, including but not limited to:

All streets, parking areas in contract limits and curbs and gutters.
Sidewalks and concrete slabs, exterior steps.

2. MATERIALS

A. Concrete – Concrete shall be ready-mixed concrete and shall be a mix of proportioned fine and coarse aggregates with Portland cement and water. Minimum cement content shall be 5 bags per cubic yard of concrete and maximum water content shall be 5.5 U.S. gallons per sack of cement, including moisture in the aggregate. Slump for normal weight concrete shall be a maximum of 4 inches and a minimum of 2 inches. The slump of machine place concrete shall be no less than 1-1/4 inches nor more than 3 inches. Standard test ASTM C-143 shall be used to measure slump. Compressive strength of concrete at 28 days shall be 4000 psi. All exterior concrete shall have air entrainment of 5% to 8% by volume per ASTM C-260. Retempering delivered concrete will not be allowed. Concrete shall be composed of:

1. Portland cement – Conforming to ASTM C-150, Type IA or Type IIIA.

2. Aggregates: Conforming to ASTM C-33

3. Water – Shall be clear and free from injurious amounts of oils, acids, alkalis, organic materials or other deleterious substances.

B. Welded Steel Wire Fabric – Where required for concrete reinforcement shall conform to ASTM A185.

C. Premoulded Joint Filler – Shall be of non-extruding type meeting ASTM D-544 except that premoulded joint filler used in concrete walk construction may be either non-extruding or resilient.

D. Bituminous Pavement Materials – All materials proposed for the construction of bituminous pavements shall comply with the Indiana Department of Transportation specifications, per latest revision.

E. Compacted Aggregate Subbase: Shall be crushed stone or gravel. Crushed gravel shall be a minimum of 35% crushed material. Chert shall be limited to a maximum of 8% of the total. Material shall be free from an excess of flat, elongated, thinly laminated, soft or disintegrated pieces; and shall be free from fragments coated with dirt. Compacted aggregate shall be graded as follows:

SIEVE SIZE	% PASSING
1-1/2"	100
1"	80-100
3/4"	70-90
1/2"	55-80
#4	35-60
#8	25-50
#30	12-30
#200	5-10

**COMMERCIAL GRADE #53 AGGREGATE MAY BE USED IN PARKING GARAGE.

3. APPLICATION

A. Grading – Do any necessary grading in addition to that performed in accordance with Earthwork Section, to bring subgrades, after final compaction, to the required grades and sections for site improvement.

B. Preparation of Subgrade – Remove spongy and otherwise unsuitable material and replace with stable material. No traffic will be allowed on prepared subgrade prior to paving.

C. Compaction of Subgrade – The first 6 inches below the subgrade shall be compacted to at least 100% of the maximum dry density as determined by the provisions of AASHTO T-99. Water shall be prevented from standing on the compacted subgrade.

D. Compacted Aggregate Subbase – the thickness shown on the drawings is the minimum thickness of the fully compacted subbase. Compaction shall be accomplished by rolling with a smooth wheeled roller weighing 8 to 10 tons. Compact to 95% standard proctor density (ASTM D698) Along curbs, headers and walls and at all placed not accessible to the roller, the aggregate material shall be tamped with mechanical tampers or with approved hand tampers.

E. Bituminous Pavement – Hot asphalt concrete pavement shall be as specified in Section 400-410 of the Indiana Department of Transportation Specifications latest revisions. Paving will not be permitted during unfavorable weather or when the temperature is not in compliance with section 401.05 of the INDOT Specifications.

F. Utility Structures – Check for correct elevation of all manhole covers, valve boxes and similar structures located within areas to be paved, and make, or have made, any necessary adjustments in such structures.

G. Placing Concrete

1. Subgrade – Place concrete only on a moist, compacted subgrade or base free from loose material. Place no concrete on a muddy or frozen subgrade.

2. Forms – All forms shall be free from warp, tight enough to prevent leakage and substantial enough to maintain their shape and position without springing or settling, when concrete is placed. Forms shall be clean and smooth and coated with form release before placement of concrete.

3. Placing Concrete – Concrete shall be deposited so as to require as little rehandling as practicable. When concrete is to be placed at an atmospheric temperature of 35 degrees F. or less, paragraph 702.10 of the Indiana Department of Transportation Specifications latest revision shall be followed.

H. Concrete Curb

1. Expansion Joints – Shall be 1/2 inch thick premoulded at ends of all returns and at a maximum spacing of 100 feet.

2. Contraction Joints – Unless otherwise provided, contraction joints shall be sawed joints spaced 20 feet on center.

3. Finish – Tamp and screed concrete as soon as placed, and fill any honey combed places. Finish square corners to 1/4" radius and other corners to radii shown.

I. Concrete Walks and Exterior Steps

1. Slopes – Provide 1/4 inch per foot cross slope. Make adjustments in slopes at walk intersections as necessary to provide proper drainage.

2. Dimensions – Walks and steps shall be one course construction and of widths and details shown on the drawings.

3. Finish – Screed concrete and trowel with a steel trowel to a hard dense surface after surface water has disappeared. Apply medium broom finish and scribe control joints at 5 foot spacing. Provide 1/2" expansion joints where sidewalks intersect, and at a maximum spacing of 48 feet between expansion joints.

J. Curing Concrete – Except as otherwise specified, cure all concrete by one of the methods described in Section 501.17 of the Indiana Department of Transportation Specifications, latest revision.

UTILITIES

1. WATER

A. All water mains shall be installed and tested in accordance with local standards and requirements.

2. GAS

Gas mains shown in the plans are for information only. The local gas utility is responsible for final design and installation of new gas mains.

3. OTHER UTILITIES

Electric, Telephone, and CATV lines shown in the plans are for information only. The local utility companies are responsible for final design and installation of their respective utility lines.

NOTE:
MINIMUM COVER OVER TOP OF ALL WATERMAINS TO BE 54" FROM FINISH GRADE.

ROGER WARD ENGINEERING INCORPORATED
CIVIL ENGINEERS - LAND PLANNERS - DEVELOPMENT CONSULTANTS
7474 MODEL ROAD
INDIANAPOLIS, INDIANA 46278
(317) 251-1738 (FAX) 251-1923
www.rw-engineering.com

SPECIFICATIONS

DRAWN BY: DBS
DATE: 01/26/2015
FILE NAME: TMP/001/DWK/001
XREF:

REVISIONS:
1.- 02/19/15 DBS REVISED PER DLZ COMMENTS
2.- 04/30/15 DBS REVISED PER DLZ COMMENTS
4.-
5.-

THREE MILE PROPETIES, INC.
PROPOSED C-STORE
& RETAIL SHOPS
8562 LAFAYETTE ROAD
INDIANAPOLIS, INDIANA

ROGER C. WARD
REGISTERED
No. PE19800489
STATE OF INDIANA
PROFESSIONAL ENGINEER

BY:

DATE: mm-dd-2015

SHEET
C901
OF
X

JOB#: TMP.001

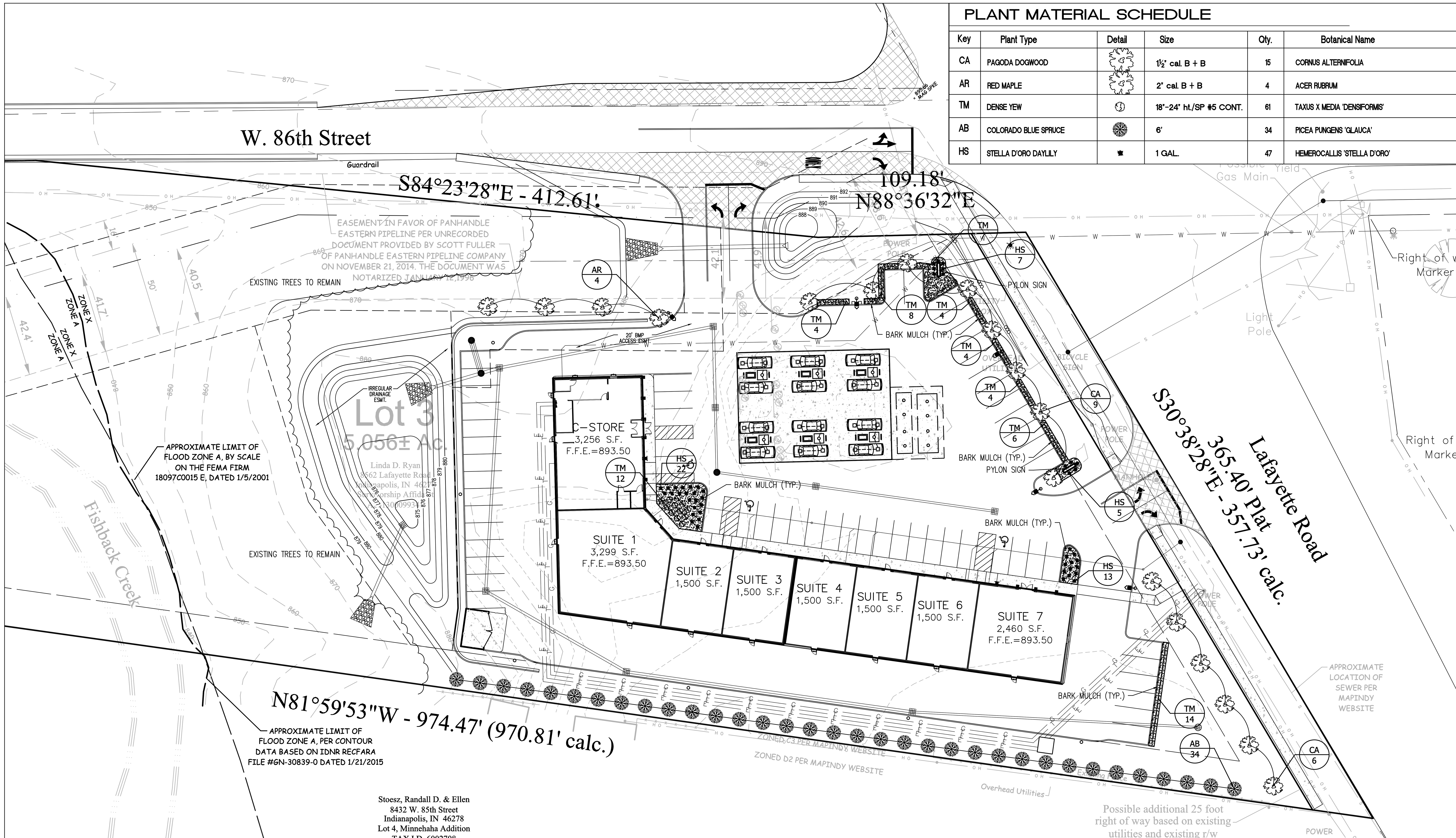

PLANT MATERIAL SCHEDULE

Key	Plant Type	Detail	Size	Qty.	Botanical Name
CA	PAGODA DOGWOOD		1½" cal. B + B	15	CORNUS ALTERNIFOLIA
AR	RED MAPLE		2" cal. B + B	4	ACER RUBRUM
TM	DENSE YEW		18"-24" ht./SP #5 CONT.	61	TAXUS X MEDIA 'DENSIFORMIS'
AB	COLORADO BLUE SPRUCE		6'	34	PICEA PUNGENS 'GLAUCA'
HS	STELLA D'ORO DAYLILY		1 GAL.	47	HEMEROCALLIS 'STELLA D'ORO'

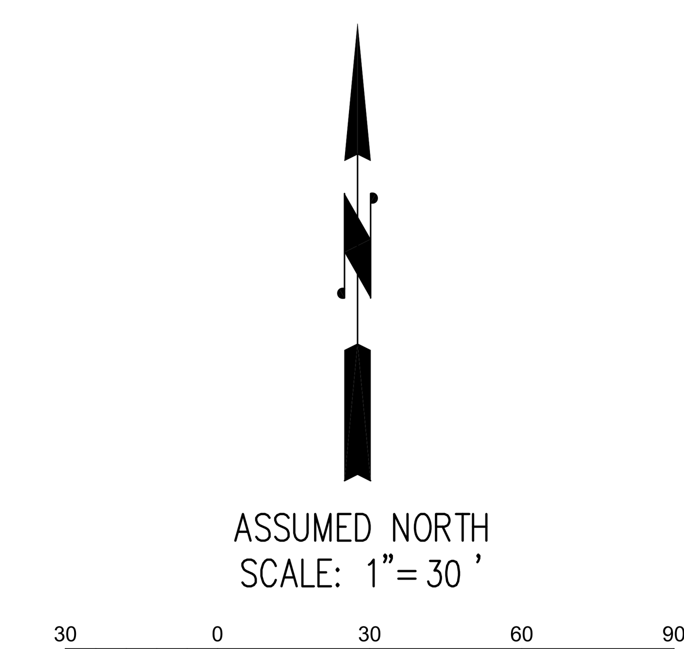

Indiana 811
Know what's below. Call before you dig.

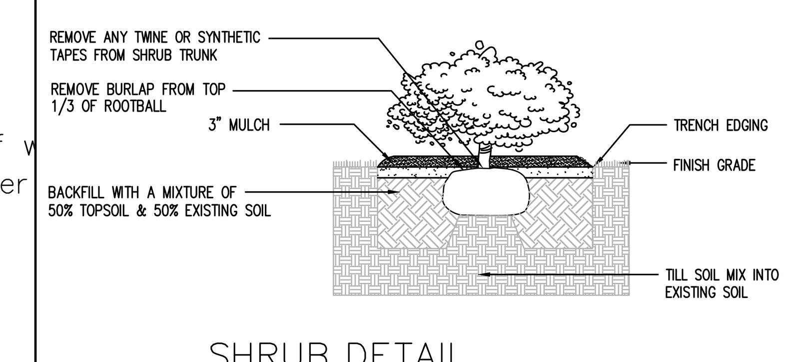

SHRUB DETAIL
SCALE: NOT TO SCALE

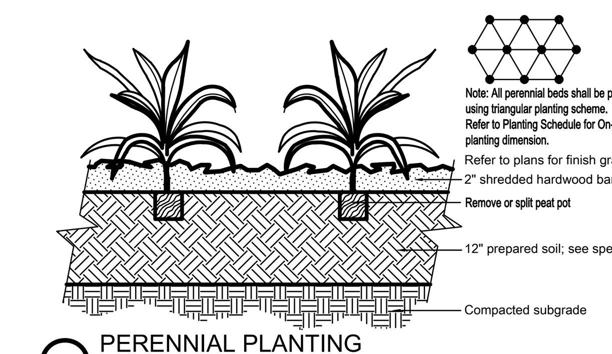

PERENNIAL PLANTING
NO SCALE

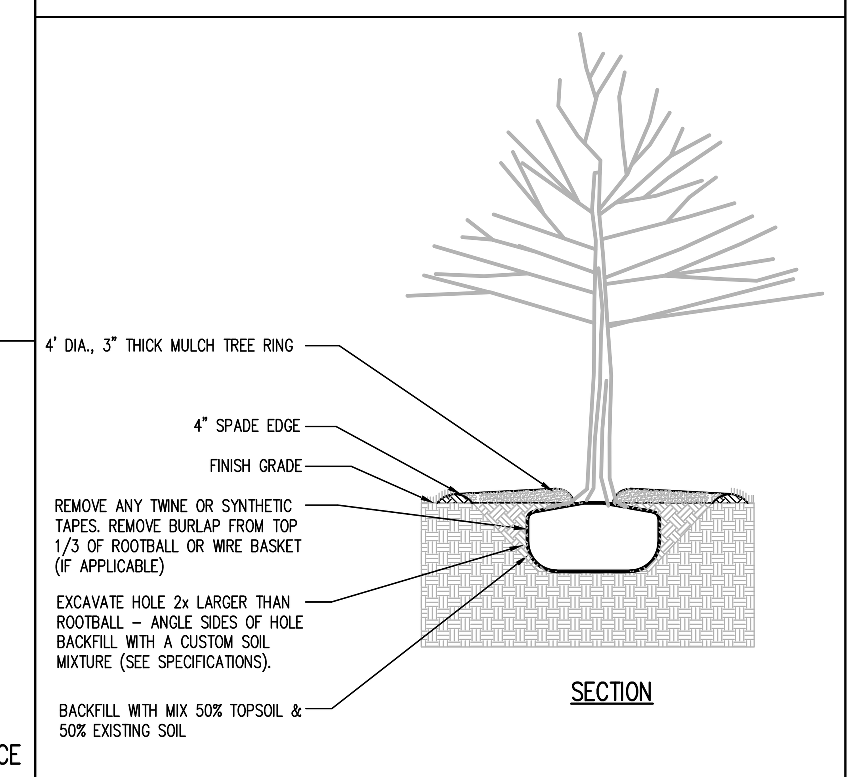

TREE DETAIL
SCALE: NOT TO SCALE

LANDSCAPE NOTES

All species of plant materials and substitutions thereof are subject to acceptance by the City of Indianapolis Planning Department approval and of the Owner(s) or a representative of the Owner(s).

All plant materials are to be warranteed for a period of no less than one year from final acceptance by the Owner(s) or a representative of the Owner(s).

All plant material is to be planted in a manner that ensures its survival. Any environmental or other type of situation that is noted by the landscape Contractor that could potentially injure the plant or shorten its longevity is to be made known to the Owner(s) and potential substitutions or corrections to the situation can be made at no expense to the Contractor.

All materials failing the one year warantee period are to be replaced at the expense of the Landscape Contractor.

Any deviation from responsible landscape practices and the City of Indianapolis Zoning Ordinance will result in the immediate termination of the Landscape Contract and the Contractor will pay all costs associated with the corrections.

All plant material is to come from respectable sources within 100 miles of the site on which it is being installed. If no source for a plant species is available within this area, the project Landscape Architect/Engineer is to be notified immediately to make a determination of possible options.

All plant material is subject to approval by the project Landscape Architect/Engineer prior to installation and may be rejected for reasons of health, aesthetics, size or other reasonable causes.

The Landscape Contractor is responsible for the timely installation of all material in his contract. Should there be a delay due to weather or other unforseeable, natural circumstances, the timeline will be adjusted.

LANDSCAPE SPECIFICATIONS

LANDSCAPE SPECIFICATIONS: These specifications cover the furnishing of labor, plants, equipment, and materials to perform landscape operations in connection with this construction project at the locations shown on the landscape drawing.

LANDSCAPE MATERIALS:

FERTILIZER: Granular non-burning product composed of not less than 50% organic slow acting, guaranteed analysis professional fertilizer, 20% nitrogen, 10% phosphoric acid, and 5% potash by weight or similarly approved composition.

PLANTING BACKFILL SOIL: Backfill plant pits with the following topsoil mixture: 1 part topsoil, 1 part soil amendment and 1 part soil from excavation. Topsoil: ASTM D5268, PH Range of 5.5 to 7, MIN. 4 percent organic material, free of stones 1 inch and larger. Soil Amendment: Sphagnum peat moss or EPA rated class IV compost. Prepare planting backfill soil on site. Notify landscape architect one week prior to commencing planting to arrange site inspection to conform sufficient quantities of imported topsoil, compost and fertilizer are on site for planting operations.

PLANT MATERIALS: Provide trees and shrubs as indicated. Comply with sizing and grading standards of "American Standard for Nursery Stock". Provide only sound, healthy vigorous plants free from defects, disfiguring knots, sun scold injuries, frost cracks, plant diseases, inspects or any other form of disease or infestation. All plants shall have fully developed form without voids or open spaces.

PLANTING BED MULCH: 3 inches of Premium grade shredded hardwood mulch (Dark Tan in color) over pre-emergent weed control granules.

SUBSURFACE UTILITIES: Contractor shall determine utility line locations prior to commencing work. Any conflicts between utility locations, excavation and/or landscape operations shall be brought to Owner's attention prior to commencing excavation and/or grading work. Contractor assumes responsibility for any utility damage resulting from landscape operations. CONTRACTOR SHALL NOTIFY UTILITY LOCATE SERVICE (1-800-382-5544) A MINIMUM OF TWO WORKING DAYS PRIOR TO EXCAVATION.

PLANTING EXCAVATION: When conditions detrimental to plant growth are encountered, such as rubble fill, adverse drainage or obstructions, notify owner before planting. See planting details for planting, pruning and staking requirements. All plant beds including tree rings found in lawn areas shall have a 4" spade edge, NO EDGING.

SEEDED LAWN: Complete all other landscape plantings, mulching and staking prior to seeding lawn areas. Apply fertilizer at a rate equal to 4 pounds of actual nitrogen per 1,000 square feet. Spread topsoil over lawn areas to a depth of two inches prior to seed bed preparation. Cultivate soil to a depth of three inches prior to seeding. Seed bed shall be in a firm but uncompacted condition with a relatively fine texture at time of seeding. Apply Warren's Turf Type Tall Fescue, Frontrunner, at the rate of 7 pounds per 1,000 square feet. Spread weed and seed free straw uniformly over seeded areas and secure to place with emulsified tackifier. Contractor shall maintain seeded lawn for a period of 60 days beyond final acceptance by mowing and watering as required to maintain vigorous growth during establishment period.

PROJECT WARRANTY: Contractor shall warrant trees, shrubs, and plants for a period of one year after date of substantial completion against defects including death and unsatisfactory growth, except for defects resulting from neglect by the Owner, abuse or damage by others, or unusual phenomena or incidents which are beyond installer's control. Remove and replace trees, shrubs or other plants found to be dead or in unhealthy condition during warranty period. Replace trees and shrubs which are in doubtful condition at end of warranty period.

LEGEND

- EXISTING WATER METER
- EXISTING BOLLARDS
- EXISTNG AREA LIGHT
- PROPOSED STORM SEWER; INLET, BEEHIVE INLET & M.H.
- PROPOSED ELECTRIC SERVICE
- PROPOSED TELEPHONE SERVICE
- PROPOSED WATER SERVICE
- PROPOSED SANITARY LATERAL
- ANNUAL PLANTINGS & GROUNDCOVER
- EXISTING SANITARY SEWER & MANHOLE
- EXISTING STORM SEWER; INLET & M.H.
- EXISTING GAS LINE
- EXISTING WATER LINE
- EXISTING ELECTRIC/TELEPHONE LINE (AERIAL)
- EXISTING UNDERGROUND ELECTRIC LINE
- EXISTING UNDERGROUND TELEPHONE LINE
- EXISTING FIRE HYDRANT
- EXISTING VALVE; GAS & WATER
- EXISTING ELECTRIC MANHOLE & TRANSFORMER
- EXISTING TELEPHONE MANHOLE & PEDESTAL

ROGER WARD ENGINEERING INCORPORATED
CIVIL ENGINEERS - LAND PLANNERS - DEVELOPMENT CONSULTANTS
7474 NOEL ROAD
INDIANAPOLIS, INDIANA 46278
(317) 251-1738 (FAX) 251-1923
www.rw-engineering.com

LANDSCAPE PLAN

DRAWN BY: DBS
DATE: 01/26/2015
FILE NAME: VDS/001/DWG/L101
XREF:

REVISIONS:
1.- 03/18/15 DBS REVISED PER DLZ COMMENTS
2.- 04/03/15 DBS REVISED PER DLZ COMMENTS
3.-
4.-

THREE MILE PROPETIES, INC.
PROPOSED C-STORE
& RETAIL SHOPS
8562 LAFAYETTE ROAD
INDIANAPOLIS, INDIANA

ROGER C. WARD JR. REGISTERED No. PE19800489 STATE OF INDIANA PROFESSIONAL ENGINEER

BY:

DATE: mm-dd-2015

SHEET
L101
OF
X

JOB#: TMP.001